EN

TECHNICAL
MANUAL

SIMPLEBUS2

Simplebus2 audio/video system
with power supply unit 4888C

Comelit®
Passion. Technology. Design.

Warning

Intended use

This Comelit product has been designed and manufactured for use in the creation of audio and video communication systems in residential, commercial, industrial and public buildings.

Installation

All activities connected to the installation of Comelit products must be carried out by qualified technical personnel, with careful observation of the indications provided in the Manuals / Instruction sheets supplied with those products.

Wires

Disconnect the power supply before carrying out any operations on the wiring.

Use wires with a cross-section suited to the distances involved, observing the instructions provided in the system manual.

We advise against running the system wires through the same duct as power cables (230V or higher).

Safe usage

To ensure Comelit products are used safely:

- carefully observe the indications provided in the Manuals / Instruction sheets,
- make sure the system created using Comelit products has not been tampered with / damaged.

Maintenance

Comelit products do not require maintenance aside from routine cleaning, which should be carried out in accordance with the indications provided in the Manuals / Instruction sheets.

Any repairs must be carried out:

- for the products themselves, exclusively by **Comelit Group S.p.A.**,
- for the systems, by qualified technical personnel.

Disclaimer

Comelit Group S.p.A. does not assume any responsibility for

- any purpose other than the intended use,
- failure to observe the indications and warnings contained in this Manual / Instruction sheet.

Comelit Group S.p.A. reserves the right to change the information provided in this Manual / Instruction Sheet at any time and without prior notice.

Table of contents

Warning 2

System functions 4

- **Operating distances** 5
- **Distances with video concentrator-amplifier Art. 4933** 6
- **Maximum system expansion** 7
- **Maximum expansion per apartment** 7
  - Example of maximum expansion per apartment 8

Wiring diagrams 9

- **System with a single riser** 9
- **Digital Entrance Panel Variant with Touch-screen module Art. UT927011**
- **Digital Entrance Panel Variant with number keypad module Art. UT9279M** 11
- **Apartment block video entry phone system with 1 to 4 risers with 2 entrance panels** 12
- **Apartment block video entry phone system with more than 4 risers** 13
- **System with 1 main video entrance panel (max 9 secondary video units)** 14
- **Cascade connection for Art. 4834/9** 16
- **Connection of amplifier Art. 4833C** 17
- **Cascade connection with several door entry monitors or door-entry phones (up to 25 per branch from Art. 4888C)** 18
- **Video entry system with 1 main entrance and porter switchboard** .. 19
- **Video entry system with 2 main entrances and porter switchboard** 20
- **Video entry system with 1 main entrance, 3 secondary video units and porter switchboard** 22
- **Video entry system with 2 main entrances, 3 secondary audio units and porter switchboard** 24
- **Simplebus TOP video entry phone system with 1 main entrance, 4 secondary entrances and the corresponding secondary porter switchboards** 26
- **Simplebus TOP video entry phone system with 2 main entrances, 4 secondary entrances and main porter switchboard** 28
- **Simplebus TOP video entry phone system with 2 main entrances, 1 main porter switchboard, 2 secondary entrances and corresponding porter switchboards** 30
- **Simplebus TOP video entry phone system with 1 main entrance, 4 secondary entrances and 2 main porter switchboards in SERIES** 32
- **Simplebus TOP video entry phone system with 1 main entrance, 3 secondary entrances and 2 main porter switchboards in PARALLEL** 34
- **Switching devices in TOP1 mode, branched KIT 8461/8451, external unit in TOP mode** 36
- **Switching devices in STANDARD mode, branched KIT 8461/8451** 38
- **Switching devices in STANDARD mode and KIT 8461/8451 in cascade connection** 40
- **Switching devices in TOP1 mode and KIT 8461/8451 in cascade connection, with external unit in TOP mode** 41
- **Addition of remote camera module Art. 1409** 42
- **Addition of remote camera module Art. 1259C** 43
- **System with remote camera module Art. 1259C in generic actuator mode and porter switchboard** 44

System functions

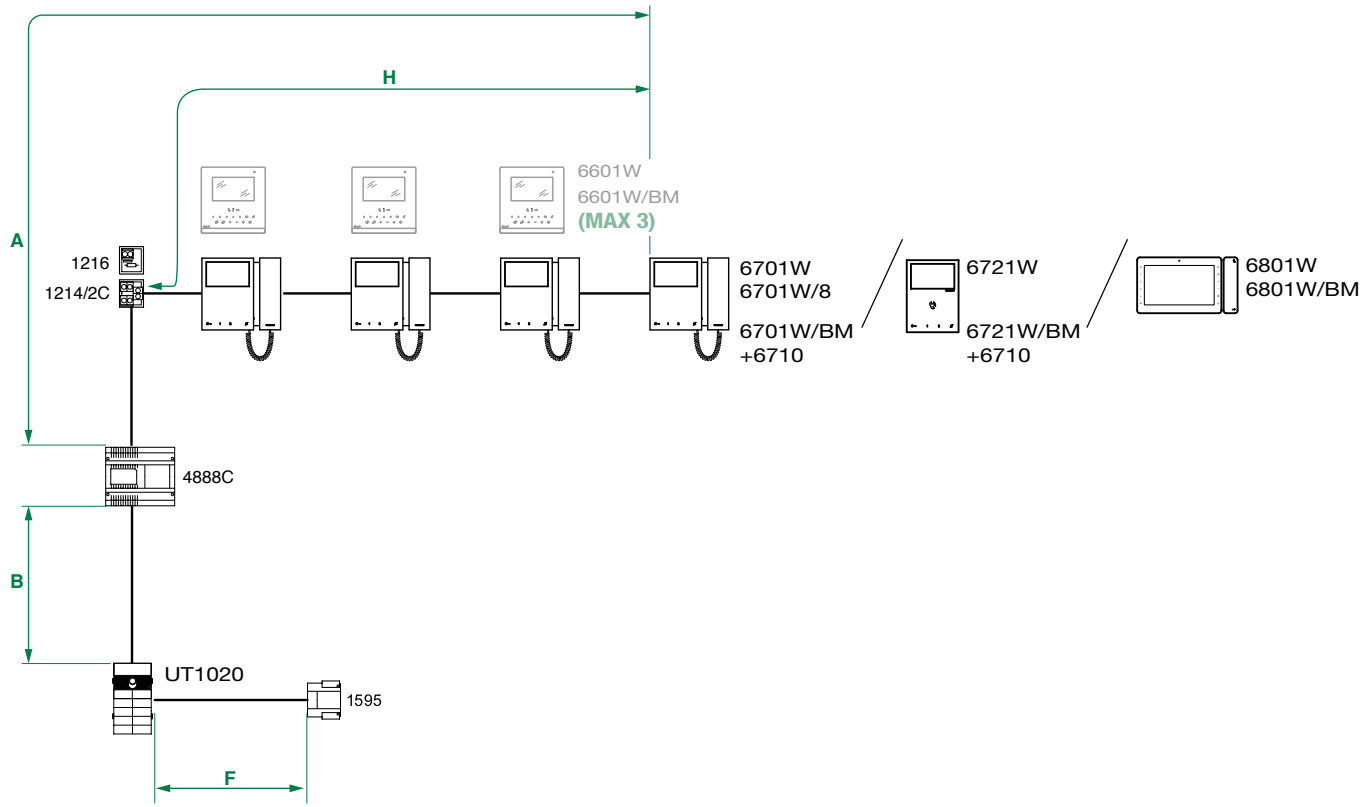

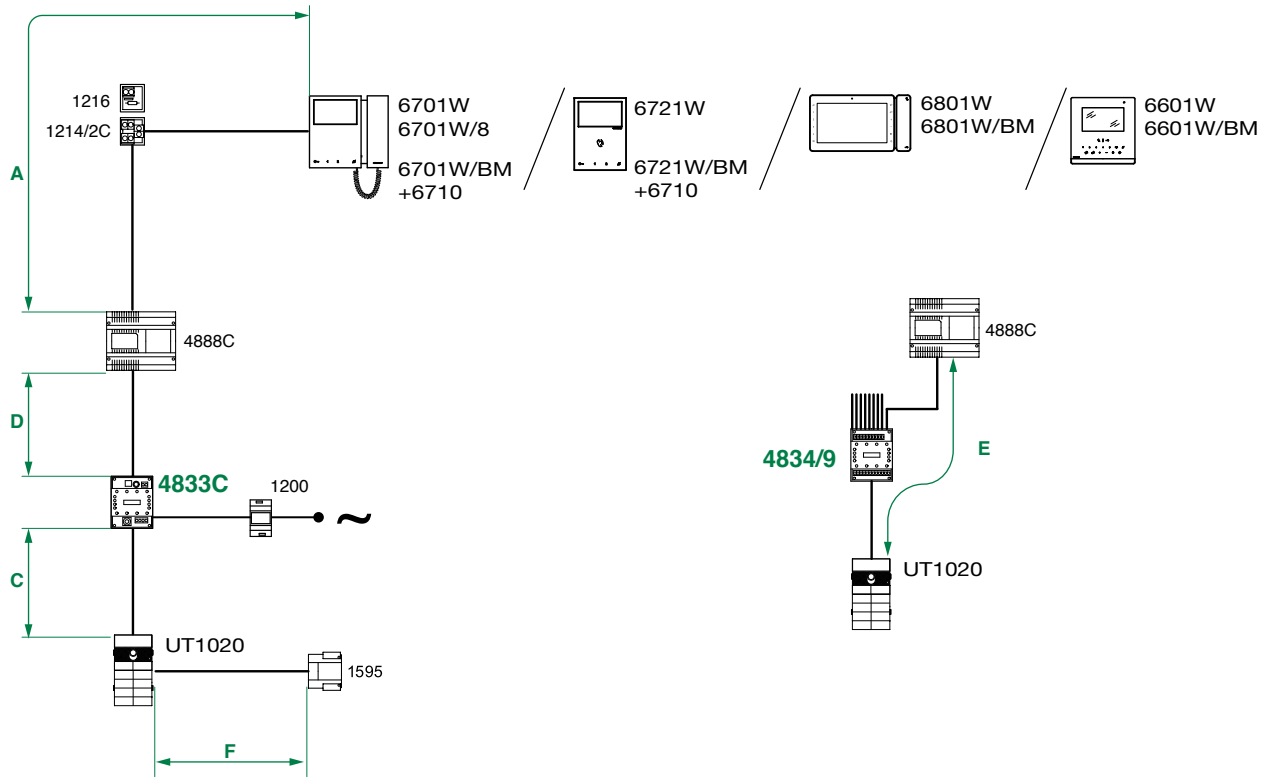

SIMPLEBUS2 AUDIO-VIDEO

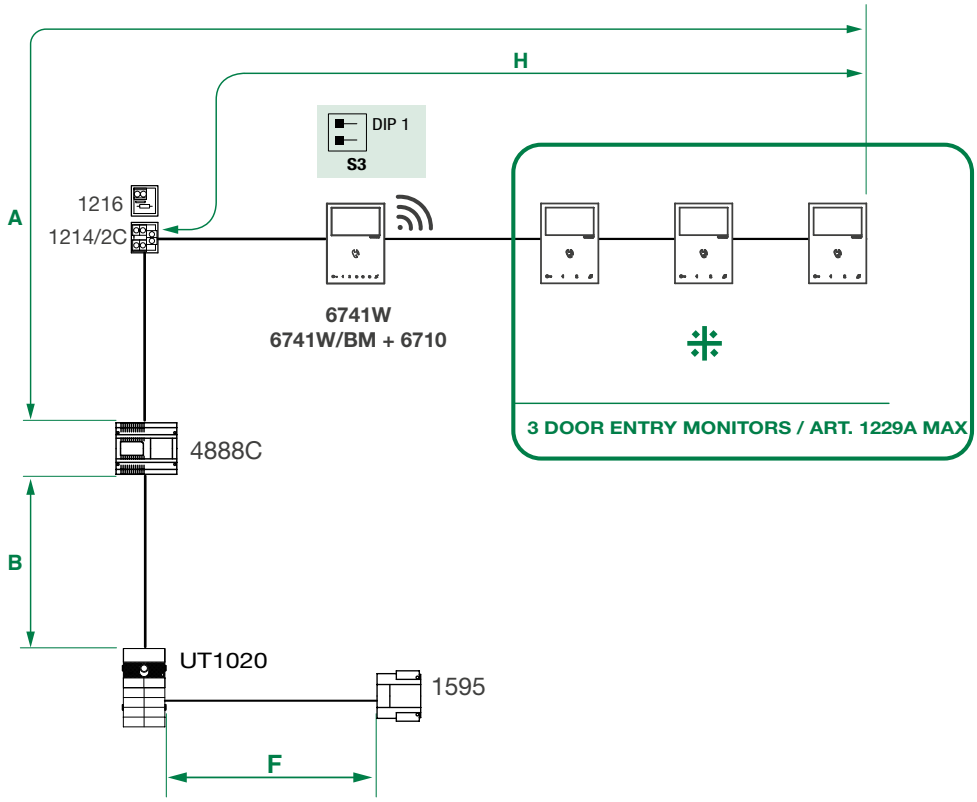

⁜ Compatible secondary door entry monitors: 6701W (/BM), 6701W/8, 6721W (/BM), 6801W (/BM), 6601W (/BM)

Operating distances

	A MAX	B MAX	C MAX	D MAX	E MAX	F MAX	G MAX (see page 8)	H MAX	Art.1216
Comelit Art. 4577/4579 1 mm² (Ø 1.2 mm AWG 17)	200 m (650 feet)	200 m (650 feet)	200 m (650 feet)	200 m (650 feet)	150 m (490 feet)	50 m (165 feet)	50 m (165 feet)	100 m (330 feet)	
UTP5 cat. 5 0.2 mm² (Ø 0.5 mm AWG 24)	80 m (260 feet)	150 m (490 feet)	150 m (490 feet)	150 m (490 feet)	100 m (330 feet)			60 m (195 feet)	
0.28 mm² (Ø 0.6 mm AWG 23)	100 m (330 feet)	150 m (490 feet)	150 m (490 feet)	150 m (490 feet)	100 m (330 feet)	5 m (15 feet)	10 m (30 feet)	60 m (195 feet)	
0.5 mm² (Ø 0.8 mm AWG 20)	120 m (395 feet)	100 m (330 feet)	100 m (330 feet)	100 m (330 feet)	80 m (260 feet)	25 m (85 feet)	25 m (82 feet)	60 m (195 feet)	
1 mm² (Ø 1.2 mm AWG 17)	120 m (395 feet)	150 m (490 feet)	150 m (490 feet)	150 m (490 feet)	80 m (260 feet)	50 m (165 feet)	50 m (165 feet)	60 m (195 feet)	
1 mm² (Ø 1.2 mm AWG 17)	120 m (395 feet)	80 m (260 feet)	80 m (260 feet)	80 m (260 feet)	50 m (165 feet)	50 m (165 feet)	50 m (165 feet)	40 m (130 feet)	
1.5 mm² (Ø 1.4 mm AWG 15)	150 m (490 feet)	100 m (330 feet)	100 m (330 feet)	100 m (330 feet)	80 m (260 feet)	75 m (245 feet)	100 m (330 feet)	60 m (195 feet)	
2.5 mm² (Ø 1.8 mm AWG 13)	150 m (490 feet)	100 m (330 feet)	100 m (330 feet)	100 m (330 feet)	80 m (260 feet)	100 m (330 feet)	150 m (490 feet)	60 m (195 feet)	

Distances with video concentrator-amplifier Art. 4933

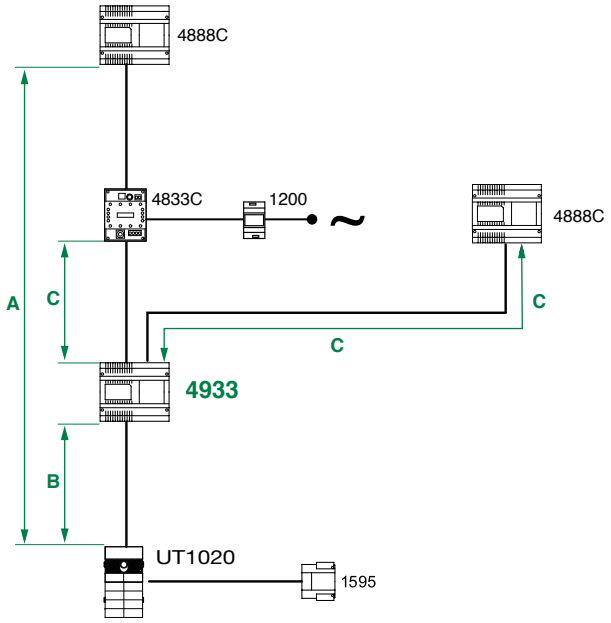

	A MAX *	B MAX	C MAX	
			NORMAL GAIN	HIGH GAIN
Comelit Art. 4577/4579 1 mm² (Ø 1.2 mm AWG 17)	600 m (1965 feet)	200 m (655 feet)	300 m (985 feet)	600 m (1965 feet)
Comelit Art. 4576/4578 0.5 mm² (Ø 0.8 mm AWG 20)	300 m (985 feet)	200 m (655 feet)	300 m (985 feet)	600 m (1965 feet)
UTP5 cat. 5 0.2 mm² (Ø 0.5 mm AWG 24)	150 m (495 feet)	150 m (495 feet)	200 m (655 feet)	300 m (985 feet)
0.28 mm² (Ø 0.6 mm AWG 23)	200 m (655 feet)	150 m (495 feet)	200 m (655 feet)	300 m (985 feet)
0.5 mm² (Ø 0.8 mm AWG 20)	300 m (985 feet)	100 m (325 feet)	200 m (655 feet)	300 m (985 feet)
1 mm² (Ø 1.2 mm AWG 17)	600 m (1965 feet)	150 m (495 feet)	200 m (655 feet)	300 m (985 feet)
1 mm² (Ø 1.2 mm AWG 17)	600 m (1965 feet)	80 m (260 feet)	100 m (325 feet)	150 m (495 feet)
1.5 mm² (Ø 1.4 mm AWG 15)	700 m (2295 feet)	100 m (325 feet)	200 m (655 feet)	300 m (985 feet)

* For greater distances, please contact **Comelit Group S.p.A.** for information on using the data amplifier Art. 1236, to be installed before Art. 4933.

Maximum system expansion

Devices	6701W(/BM) 6701W/8	6721W(/BM)	6601W(/BM)	6801W(/BM)	6741W(/BM)
Maximum number of door entry monitors that can be powered from art. 4888C	100	100	100	100	100* (4888C with IR ≥053) 50* (4888C with IR ≥021 ≤052)
Call repetition devices that can be used	1229A	1229A	1229A 1229#	1229A 1229#	1229A

* For further information, see the manual for Art. 6741W

\# For installation information and limits, consult the relative manual

Maximum expansion per apartment

Devices	6701W(/BM) 6701W/8	6721W(/BM)	6601W(/BM)	6801W(/BM)	6741W(BM)
Maximum number of internal units (including call repetition devices) with the same user code	4	4	3	4	1*
Maximum number of main door entry monitors powered from the riser	2	2	2	2	1
Maximum number of main door entry monitors that can be powered from Art. 1212/B	/	/	1	2	/

* A **single 6741W (/BM) door entry monitor** can be installed for each user code; this will also be the only main door entry monitor.
Up to 3 secondary door entry monitors can also be added (6701W (/BM), 6701W/8, 6721W (/BM), 6801W (/BM), 6601W (/BM)).

Example of maximum expansion per apartment

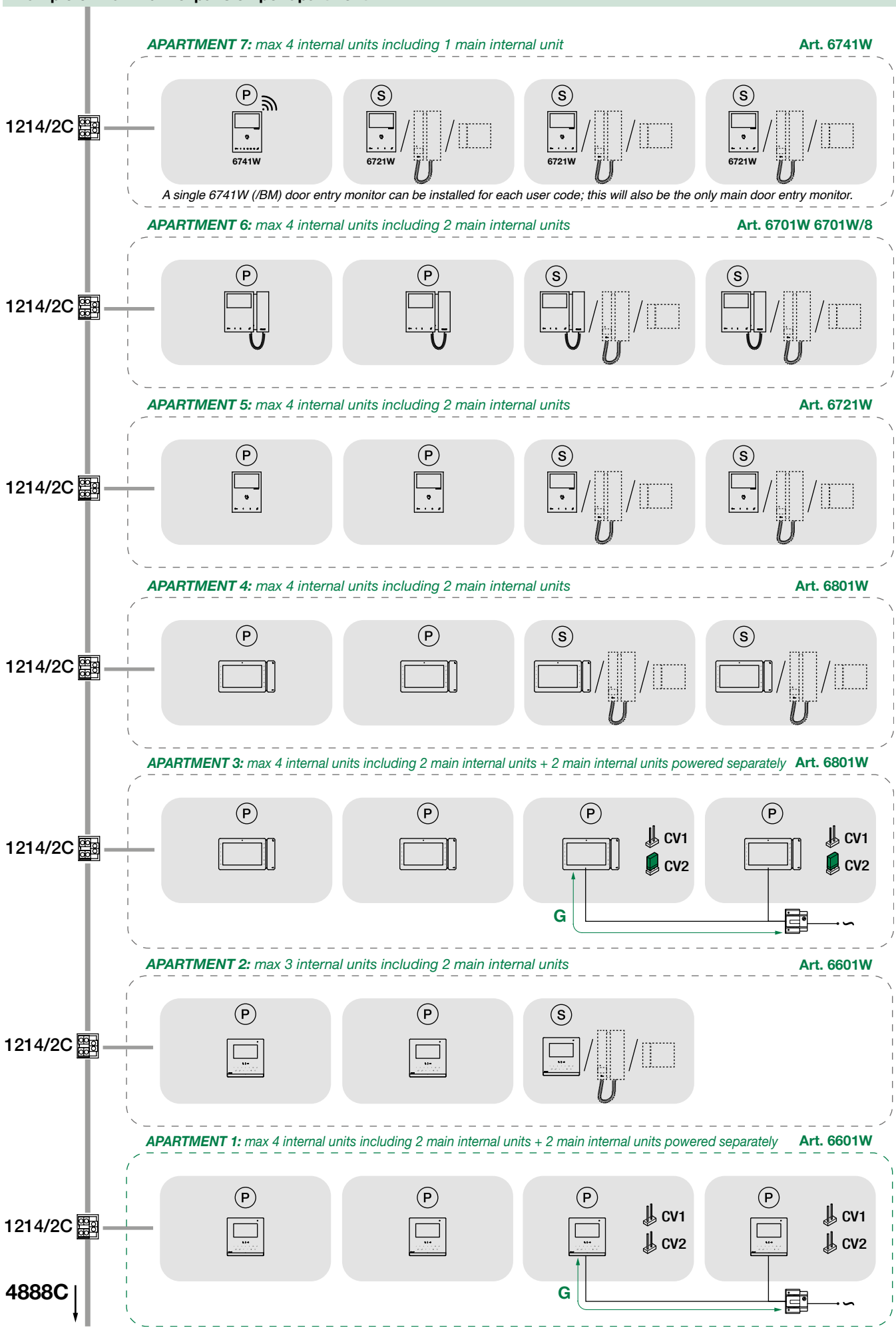

Wiring diagrams

System with a single riser

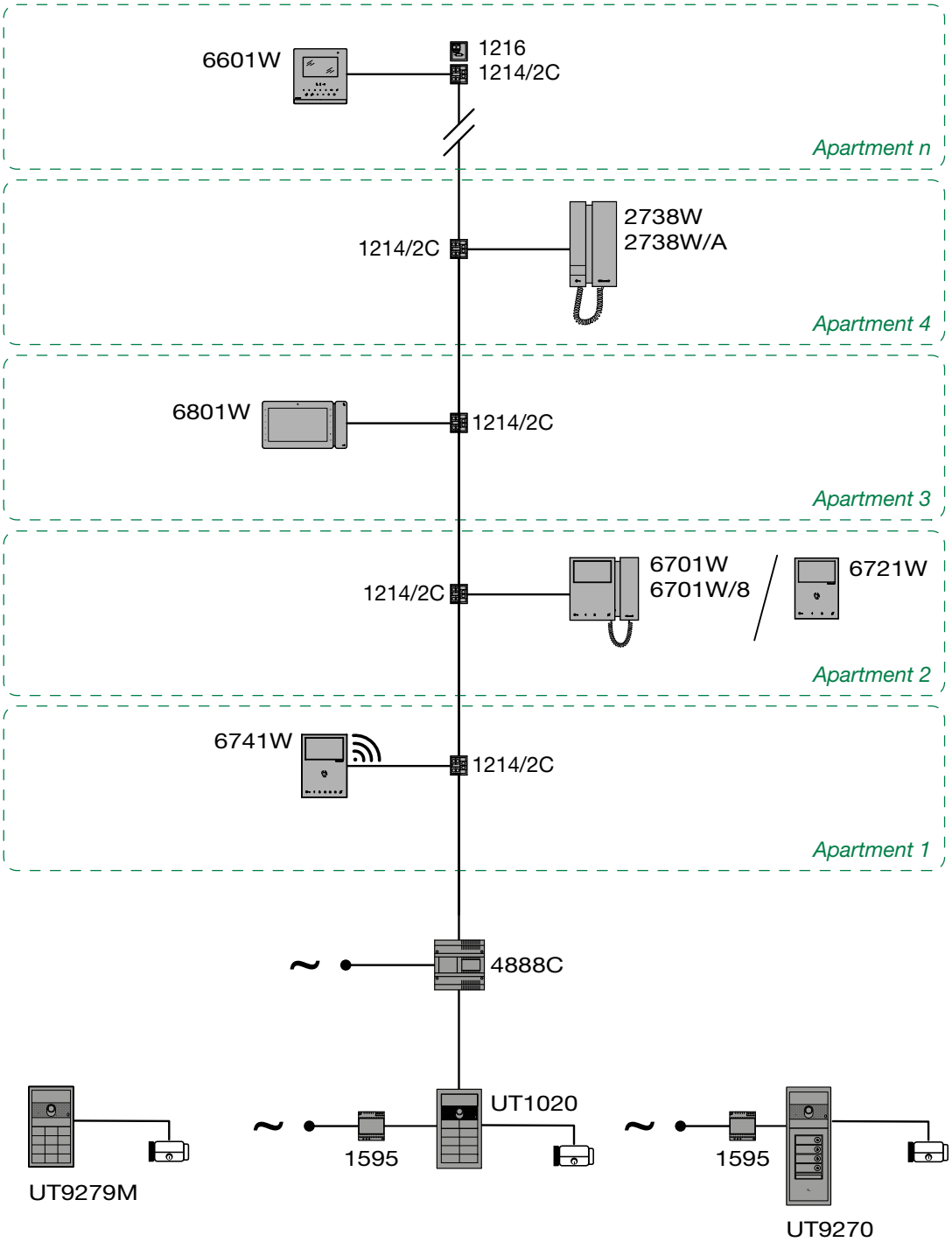

VIDEO ENTRY SYSTEM RISER

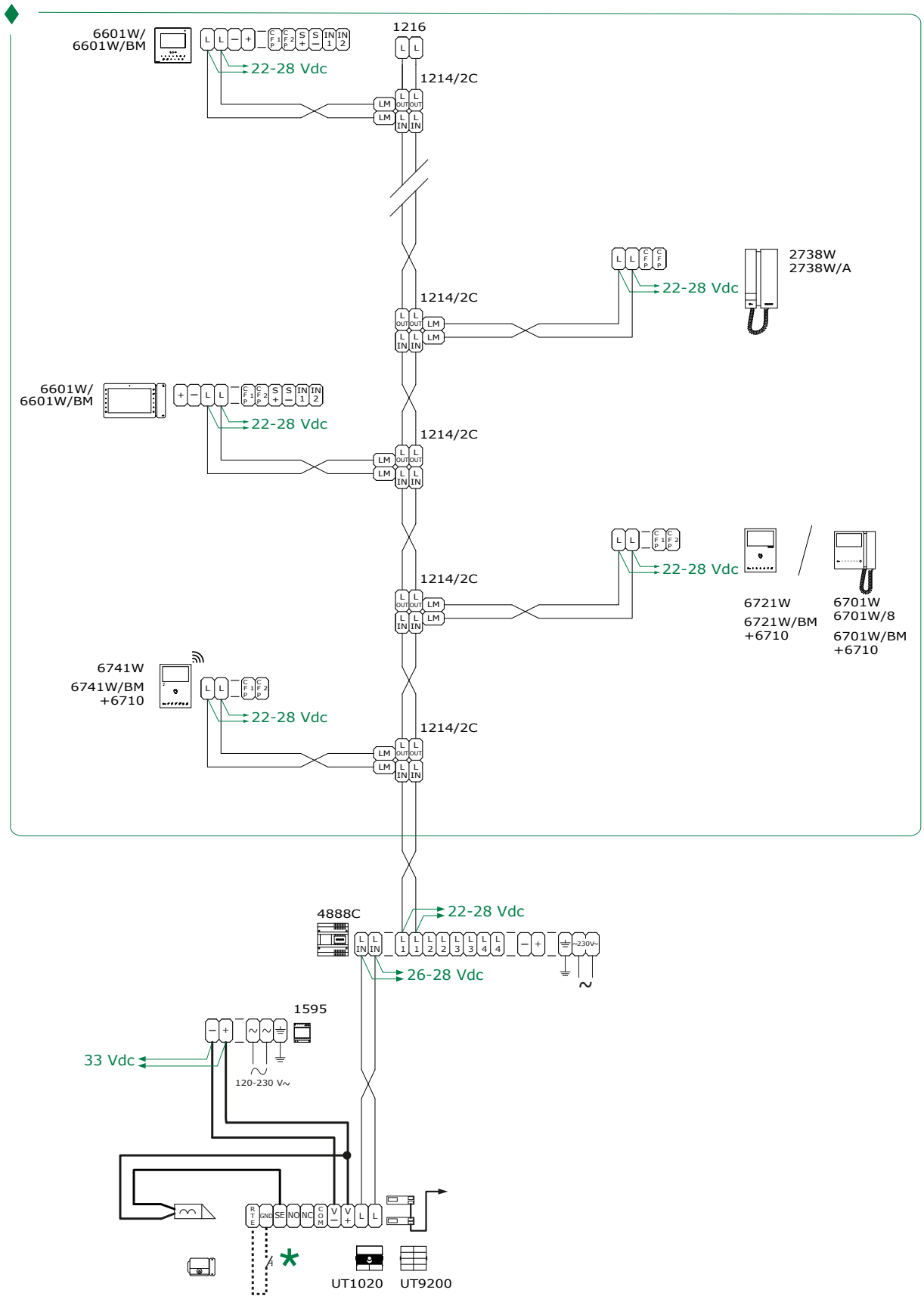

* **20 m MAX.** Local door-opener button.

Digital Entrance Panel Variant with Touch-screen module Art. UT9270

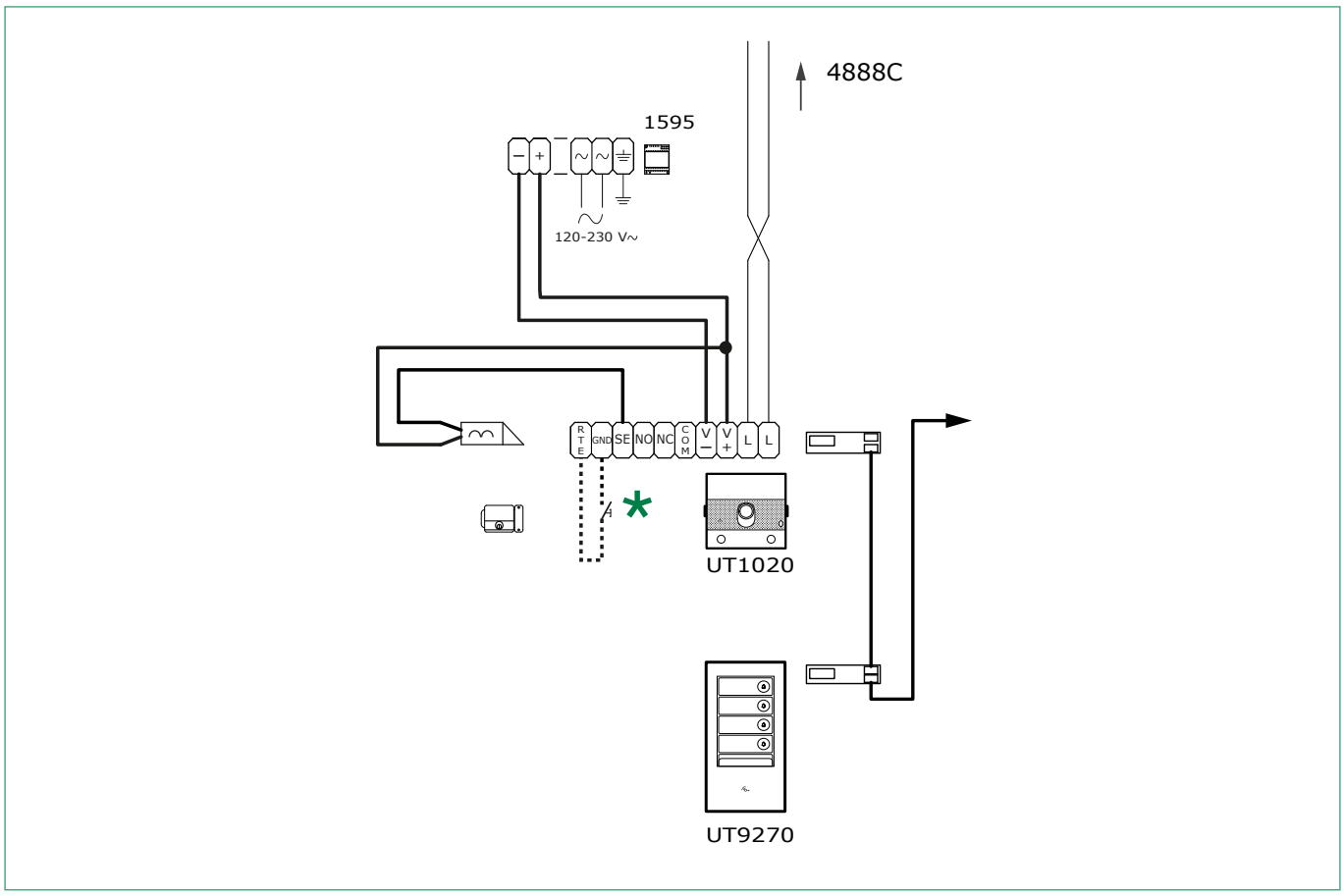

* **20 m MAX.** Local door-opener button.

Digital Entrance Panel Variant with number keypad module Art. UT9279M

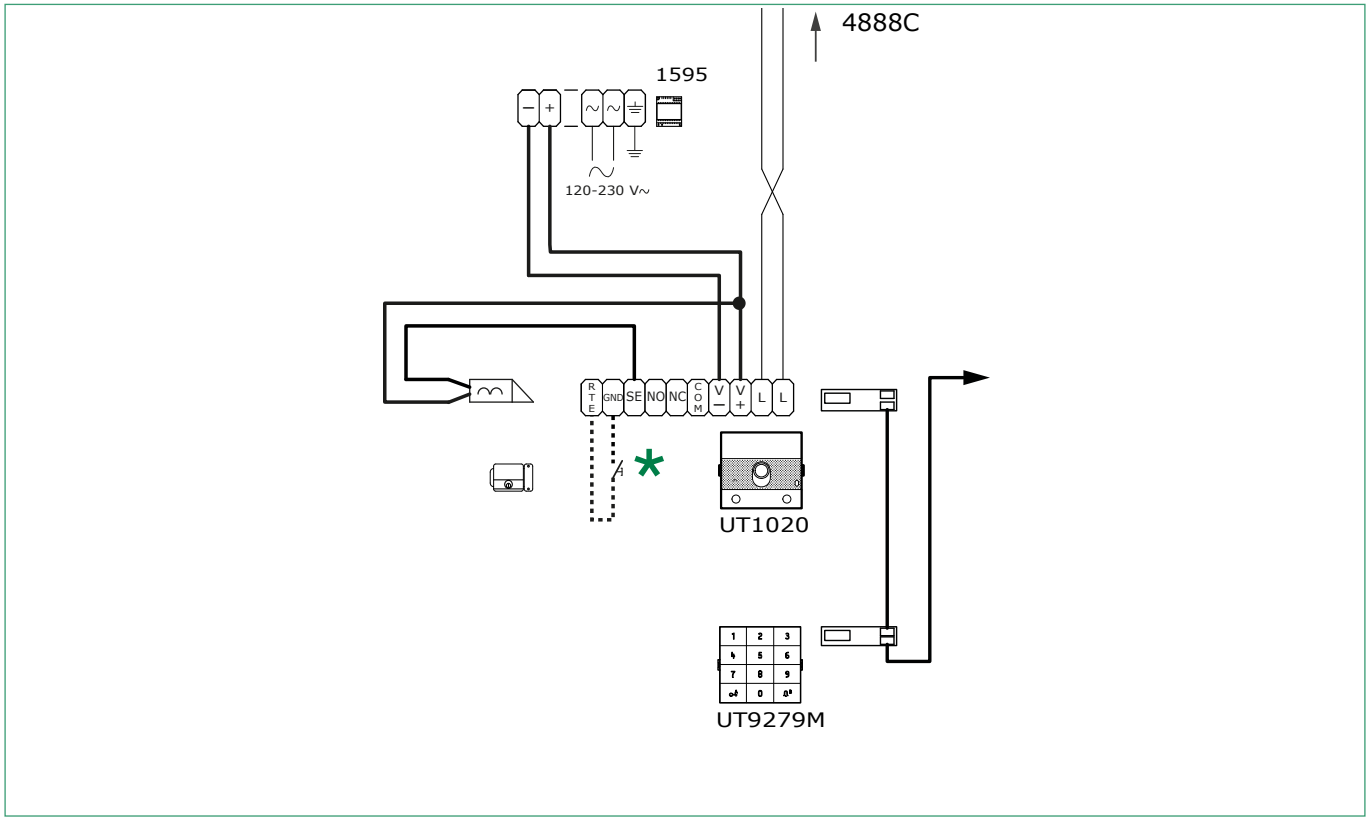

* **20 m MAX.** Local door-opener button.

Apartment block video entry phone system with 1 to 4 risers with 2 entrance panels

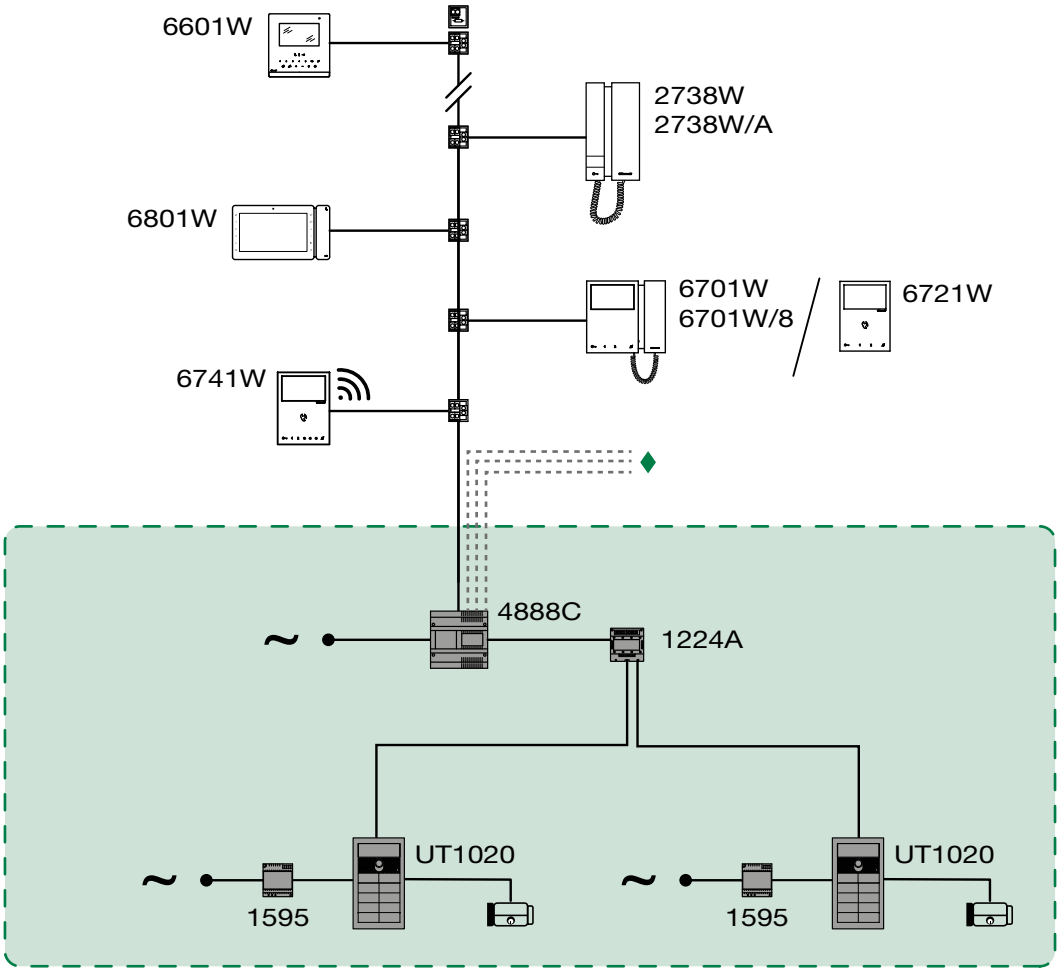

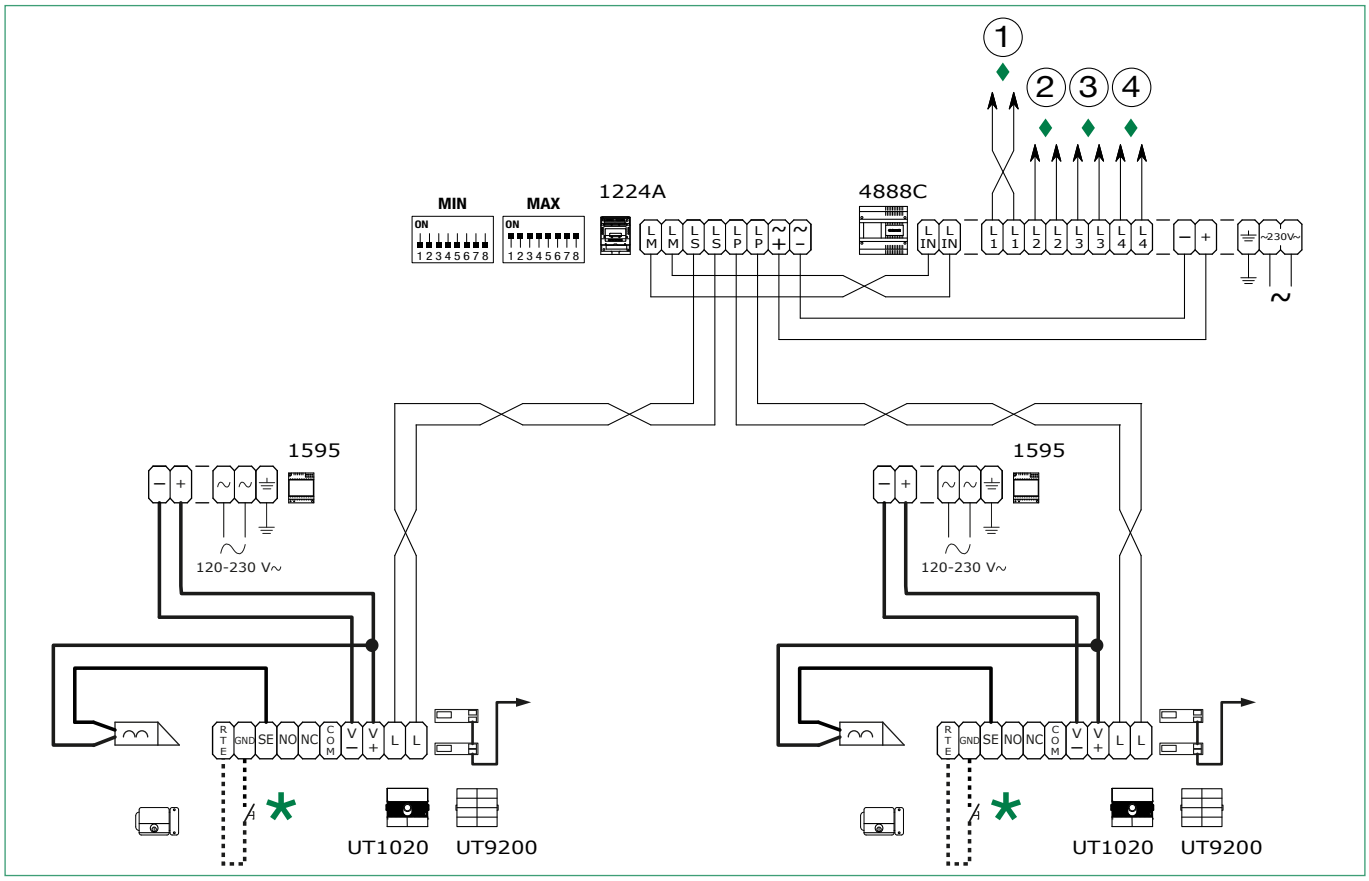

♦ Video entry system riser (see: **"VIDEO ENTRY SYSTEM RISER"**)

✱ **20 m MAX.** Local door-opener button.

Apartment block video entry phone system with more than 4 risers

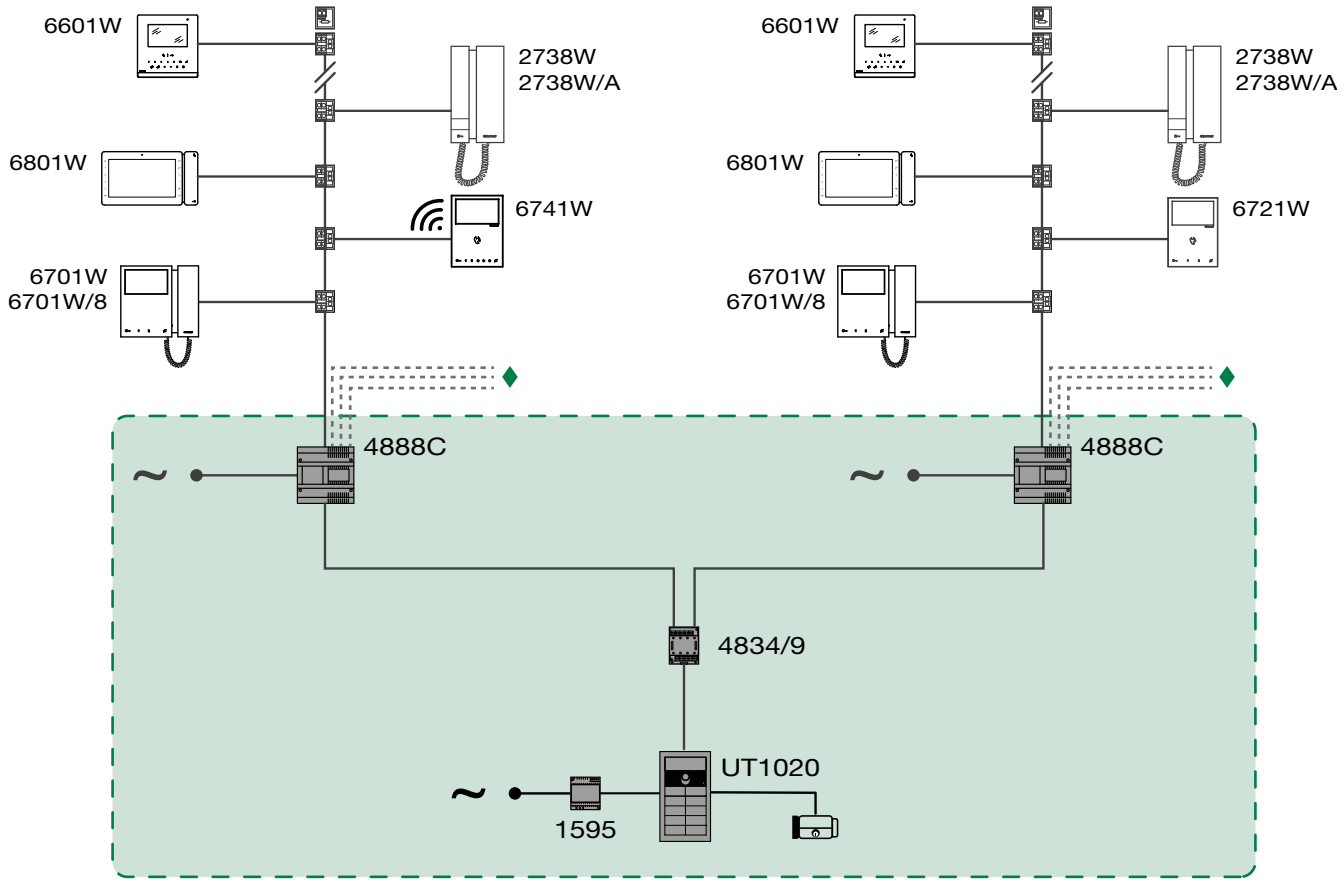

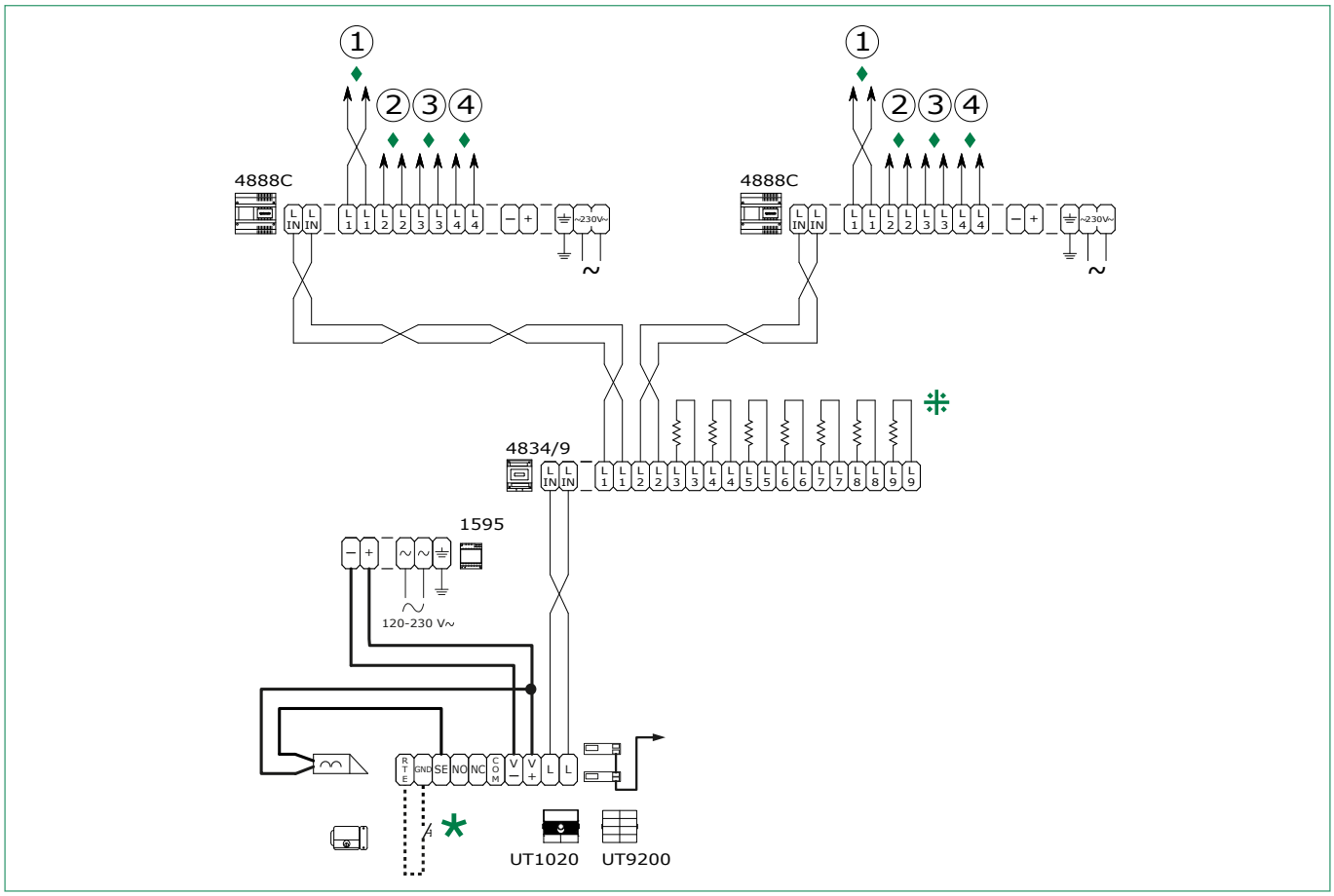

- ♦ Video entry system riser (see: **"VIDEO ENTRY SYSTEM RISER"**)
- ✶ **20 m MAX.** Local door-opener button.
- ⁜ Only cut off the resistor for the output used.

System with 1 main video entrance panel (max 9 secondary video units)

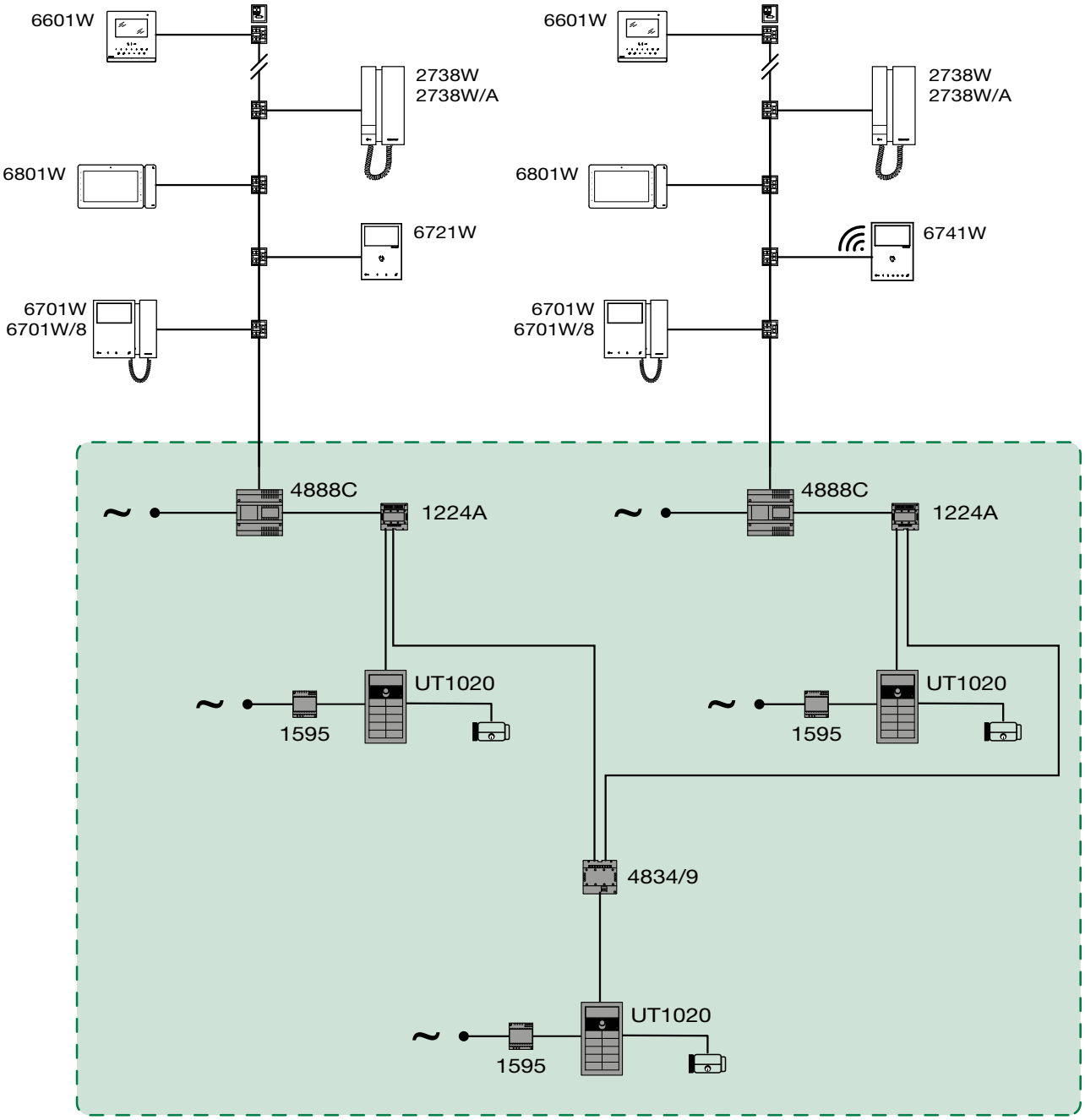

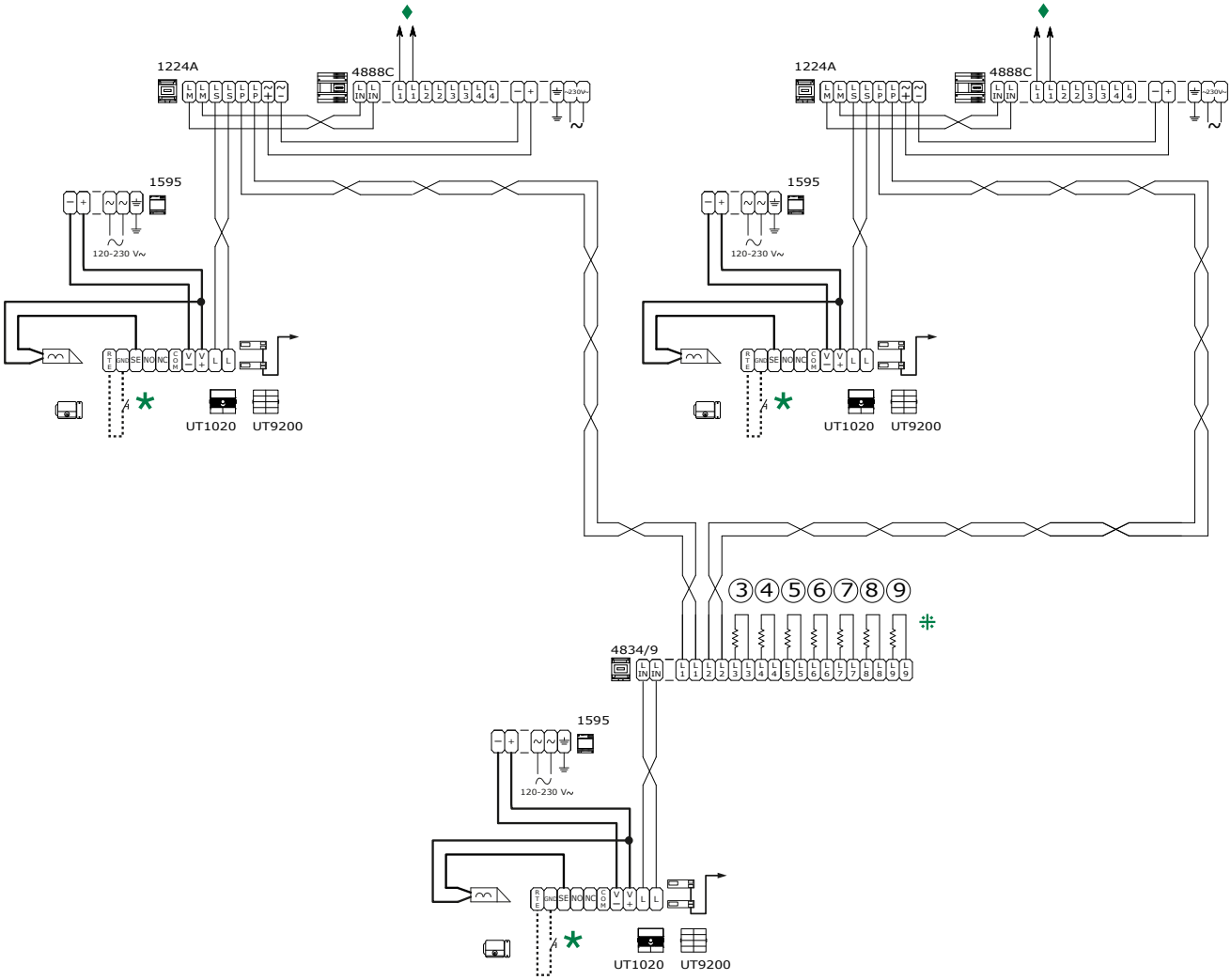

♦ Video entry system riser (see: **"VIDEO ENTRY SYSTEM RISER"**)

✶ **20 m MAX.** Local door-opener button.

⌗ Only cut off the resistor for the output used.

Cascade connection for Art. 4834/9

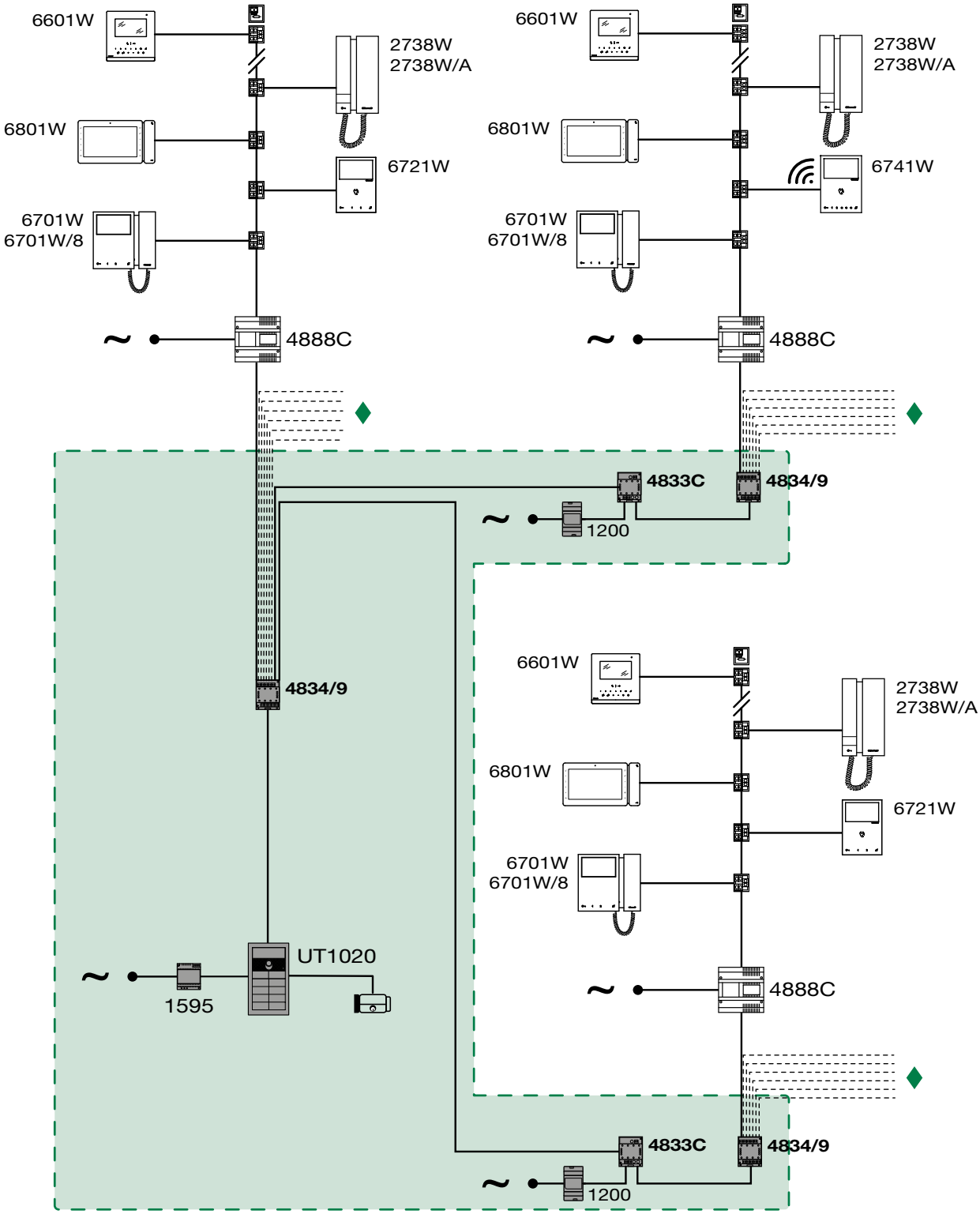

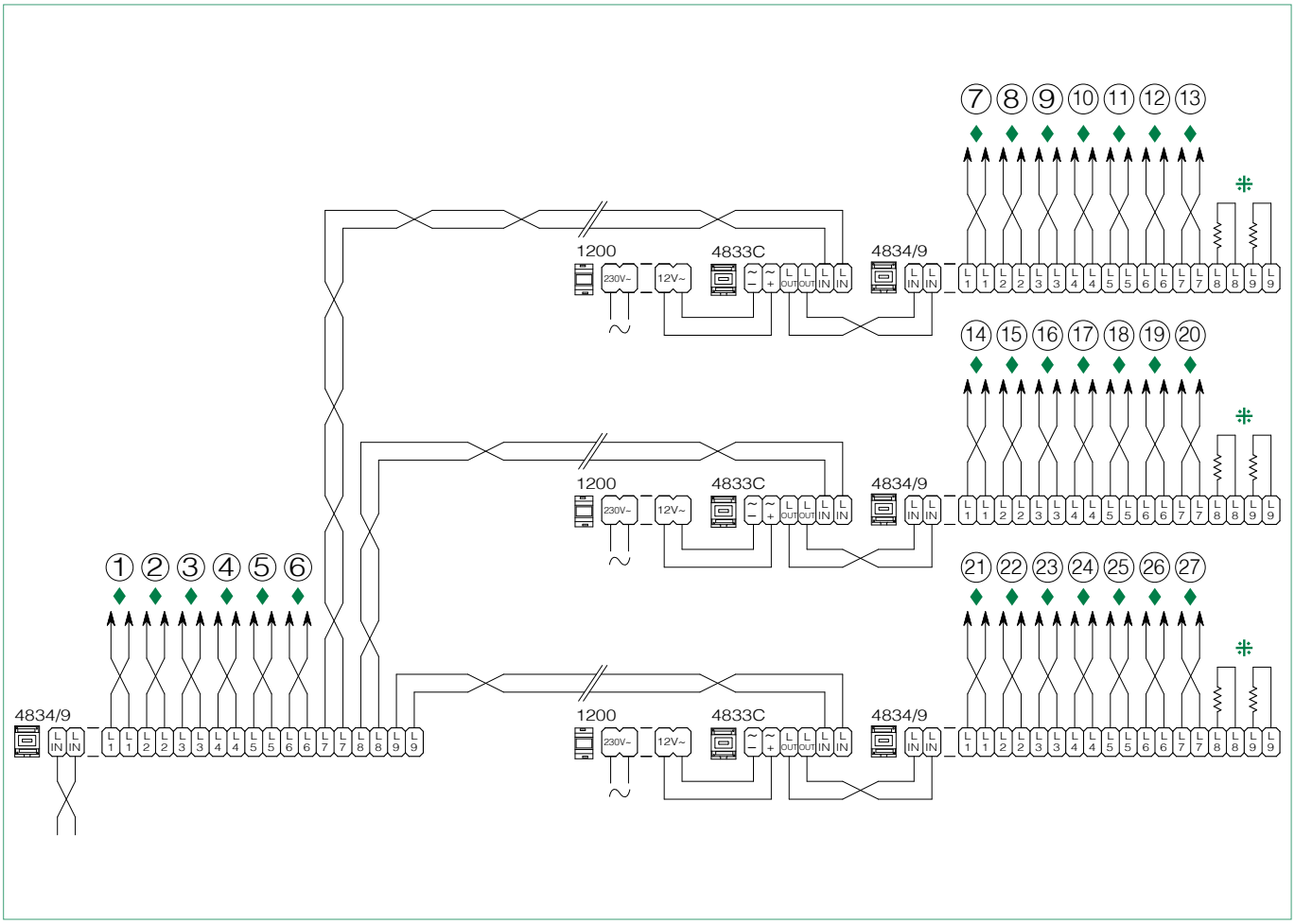

♦ Video entry system riser (see: **"VIDEO ENTRY SYSTEM RISER"**)

⁜ Only cut off the resistor for the output used.

Connection of amplifier Art. 4833C

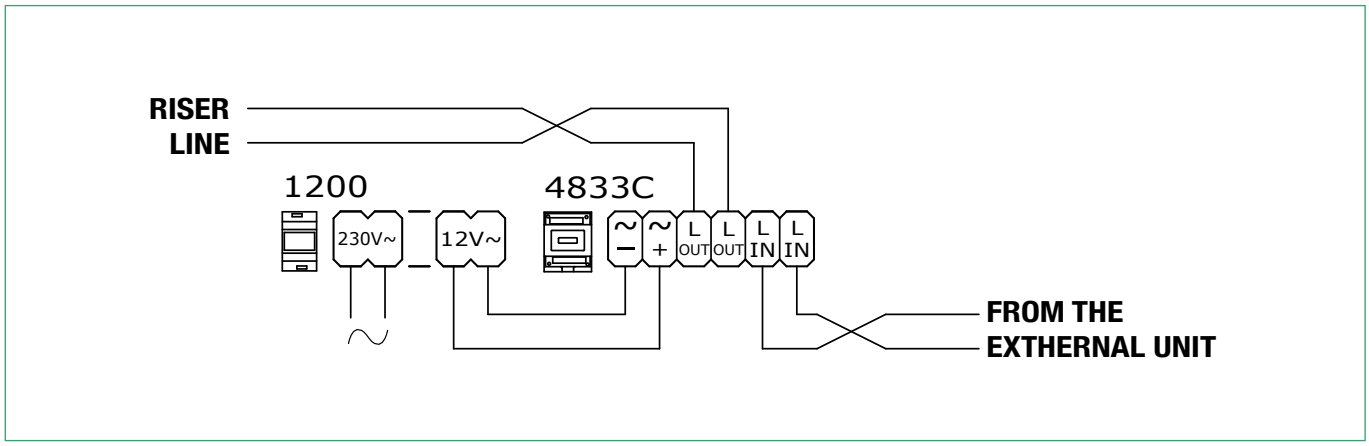

Cascade connection with several door entry monitors or door-entry phones (up to 25 per branch from Art. 4888C)

In the case of connection in cascade, the **MAX** number of door entry monitors/door-entry phones that can be connected for each riser branch of the Mixer-power supply Art. 4888C is 25. Each door-entry phone Art. 2738W, 2738/A and Art. 6750W must be preceded by an Art. 1214/2C. For the distances permitted between the furthest door entry monitor/door-entry phone and the Mixer-power supply Art. 4888C according to the cables, please refer to the table **"Operating distances"**column **A**.

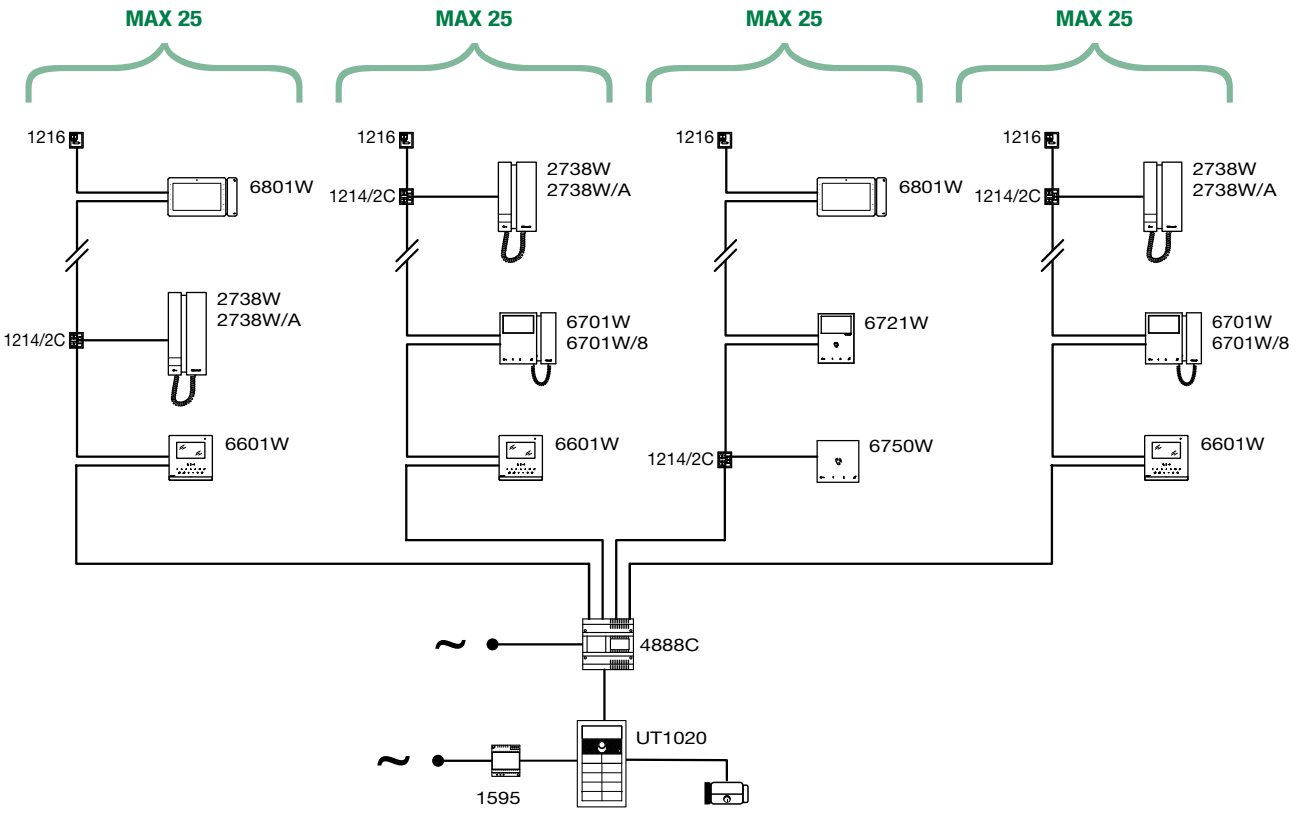

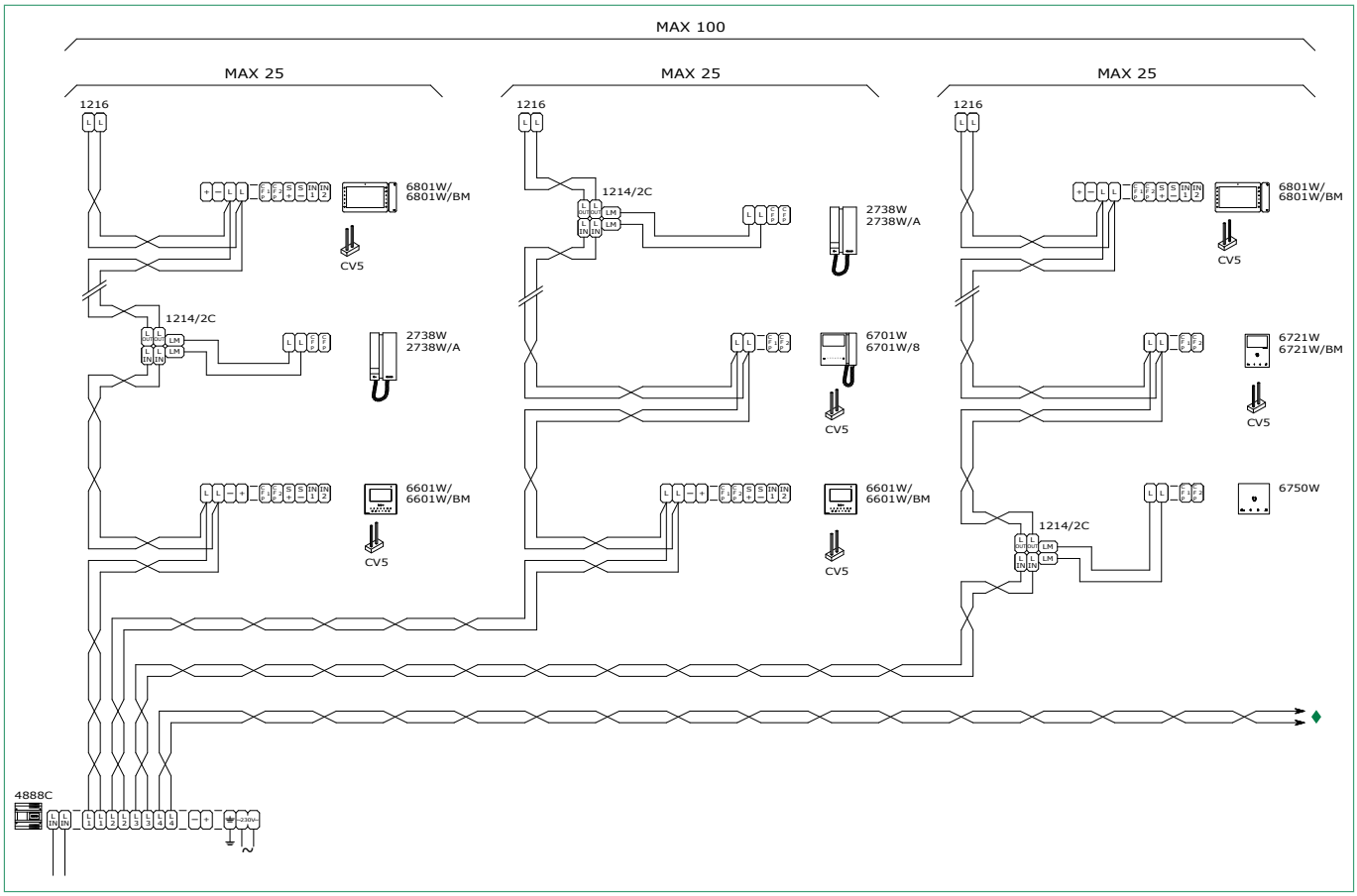

Video entry system with 1 main entrance and porter switchboard

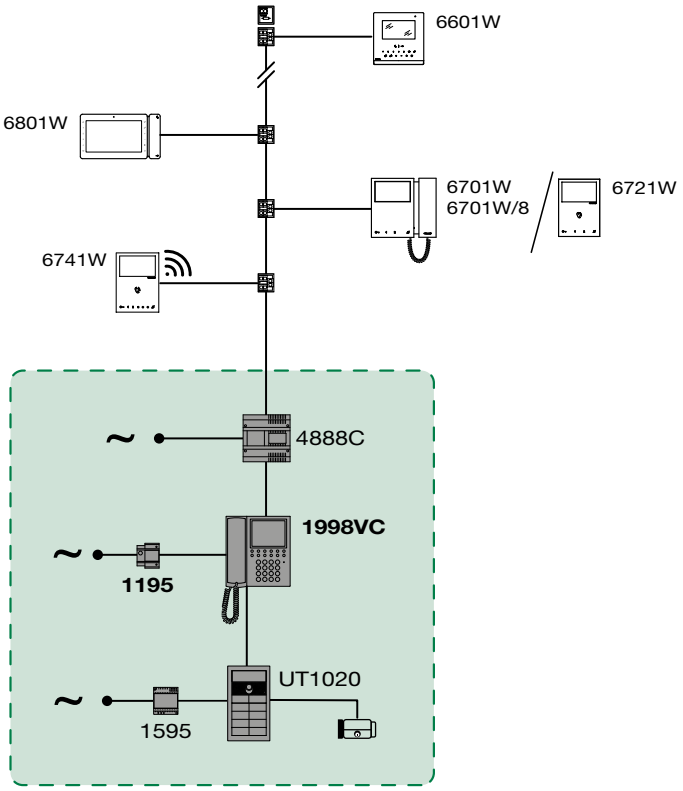

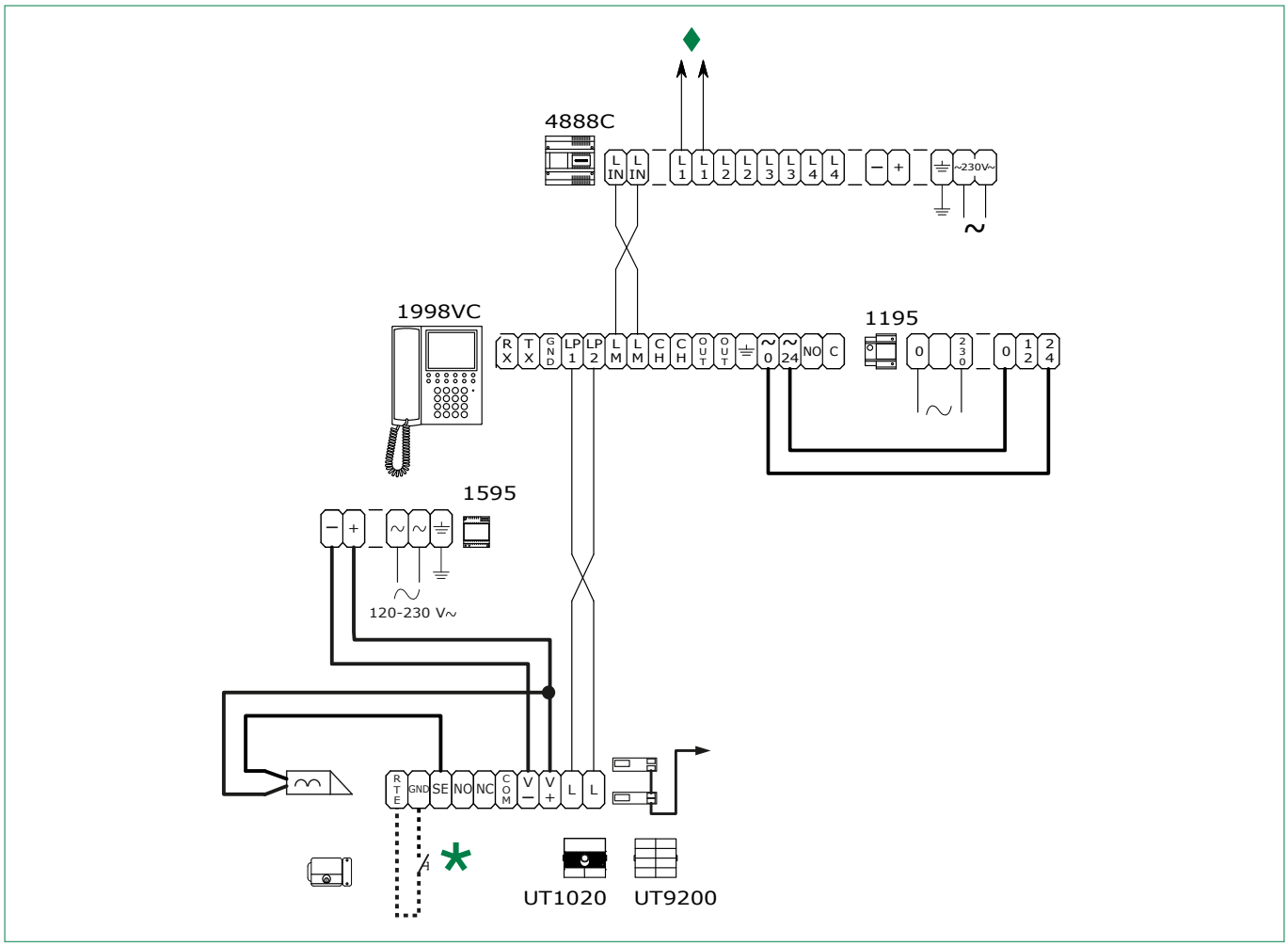

♦ Video entry system riser (see: **"VIDEO ENTRY SYSTEM RISER"**)

✱ **20 m MAX.** Local door-opener button.

Video entry system with 2 main entrances and porter switchboard

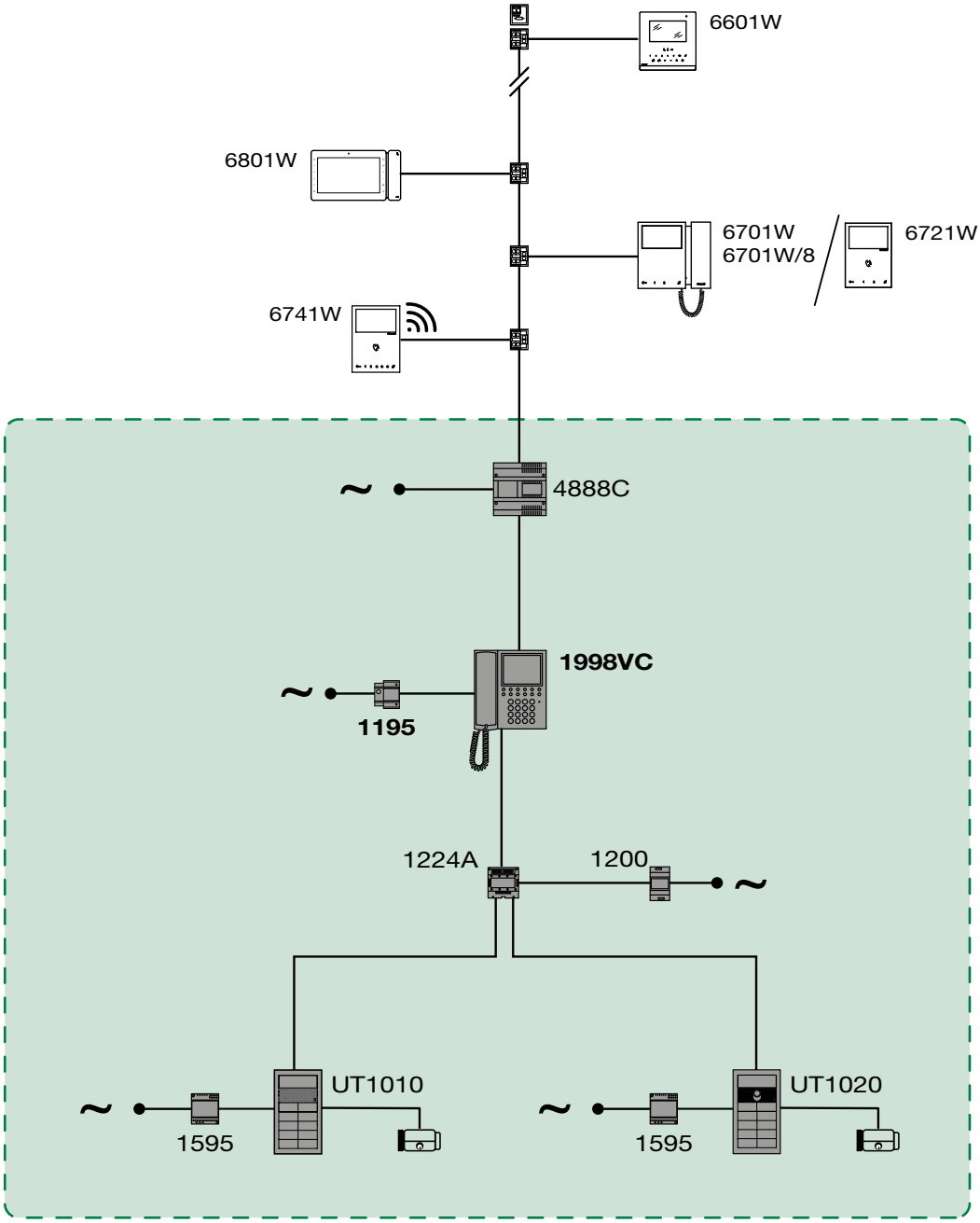

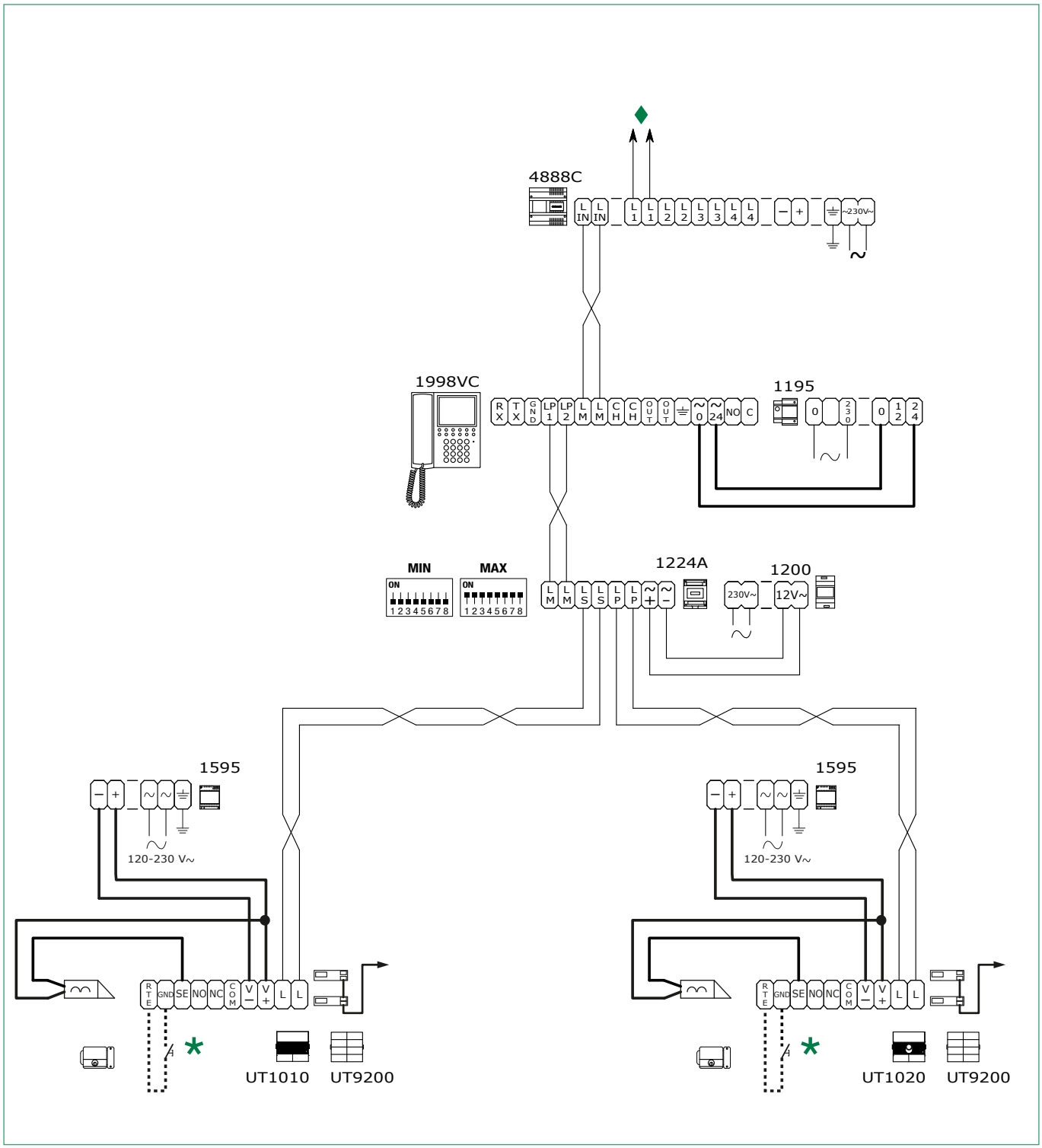

♦ Video entry system riser (see: **"VIDEO ENTRY SYSTEM RISER"**)

* **20 m MAX.** Local door-opener button.

Video entry system with 1 main entrance, 3 secondary video units and porter switchboard

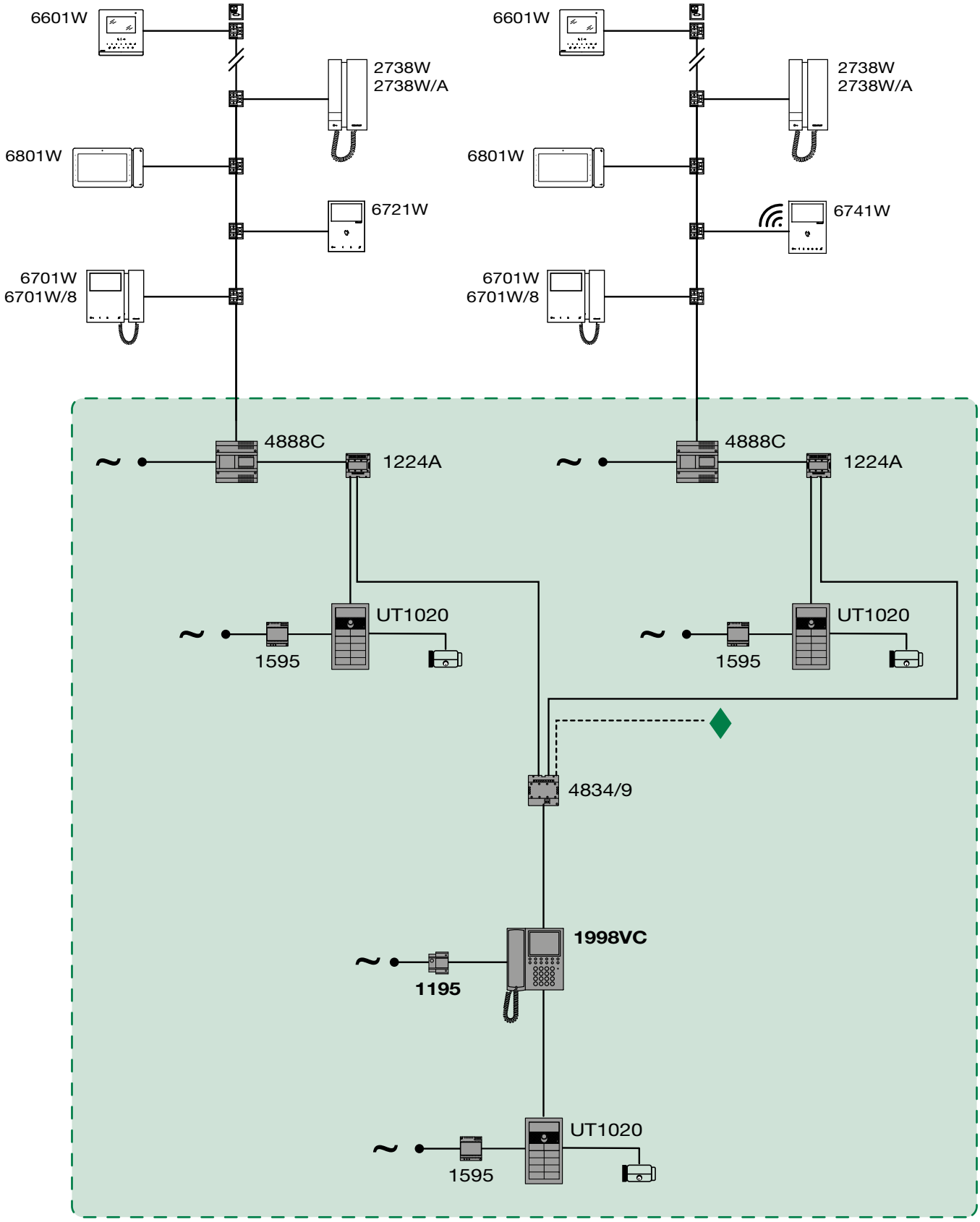

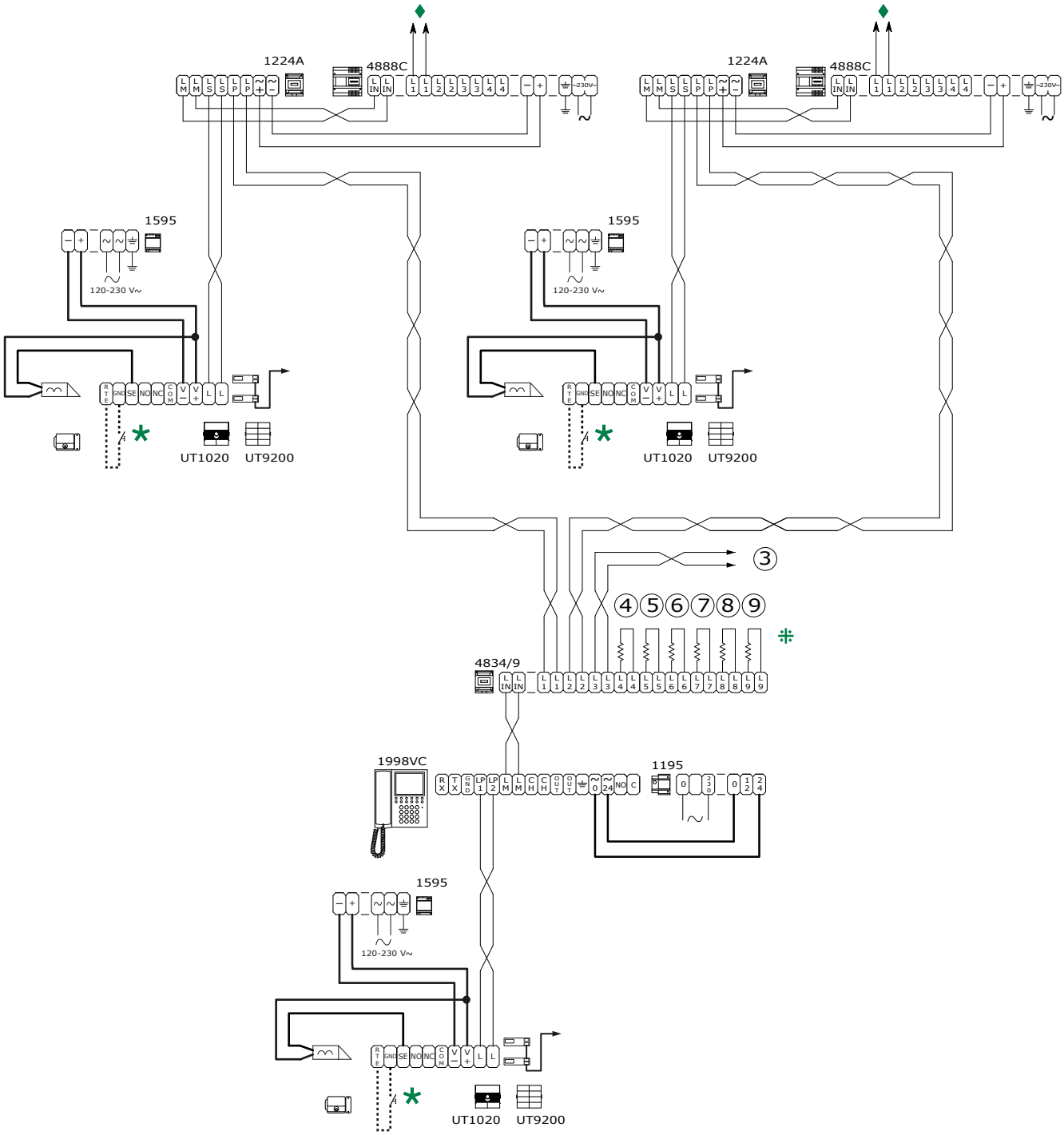

- ♦ Video entry system riser (see: **"VIDEO ENTRY SYSTEM RISER"**)
- ✱ **20 m MAX.** Local door-opener button.
- ⁜ Only cut off the resistor for the output used.

Video entry system with 2 main entrances, 3 secondary audio units and porter switchboard

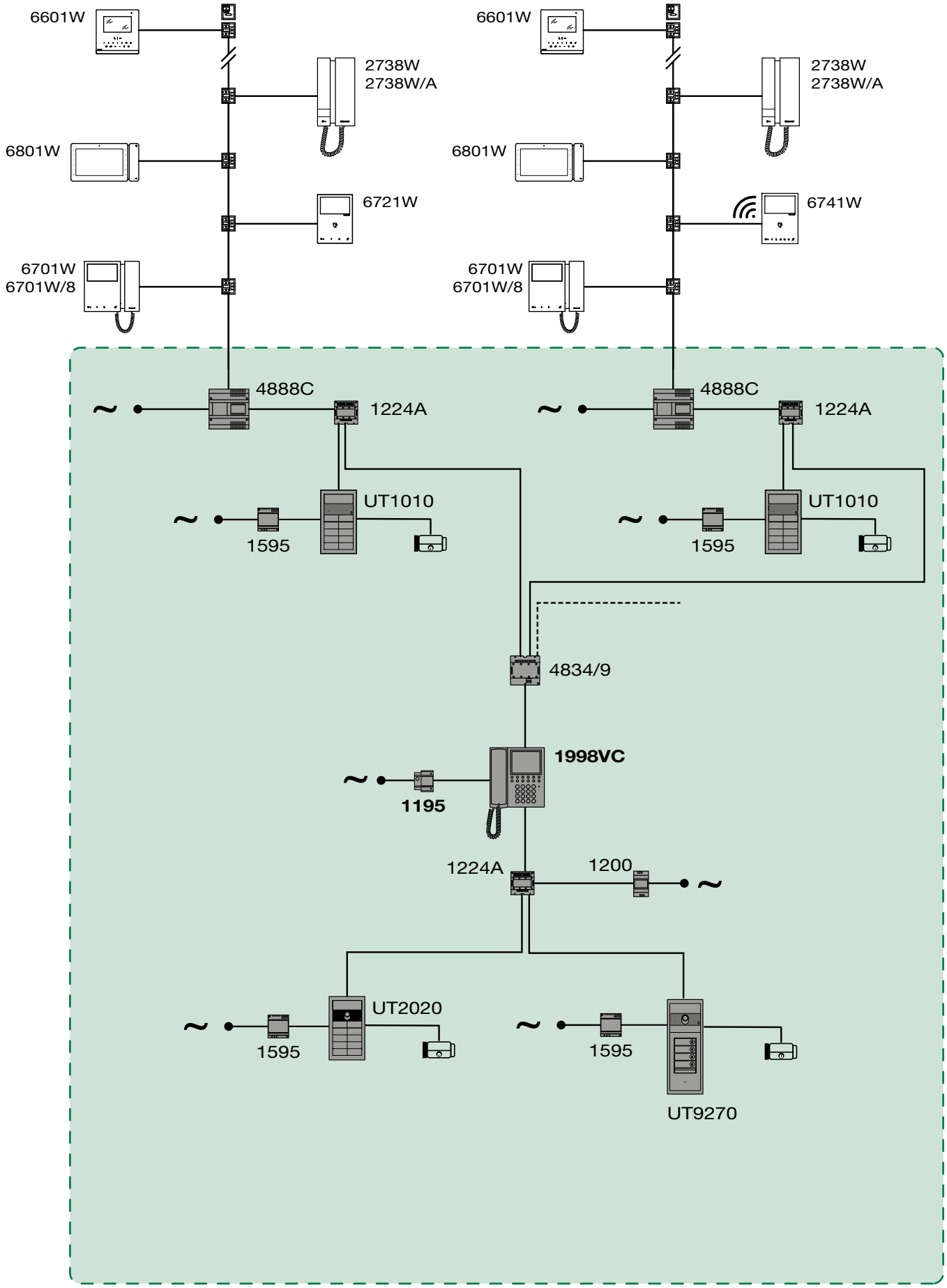

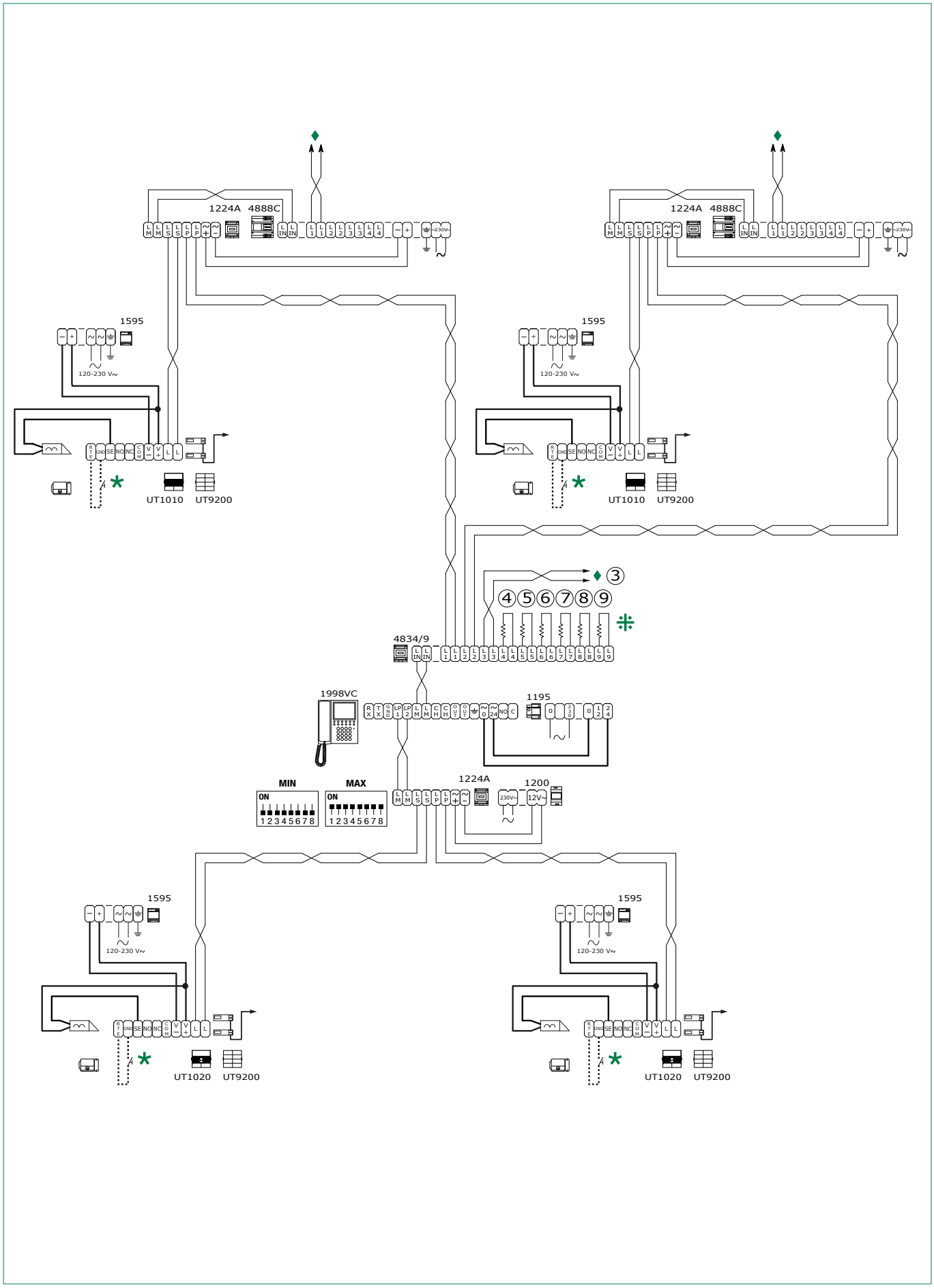

- ♦ Video entry system riser (see: **"VIDEO ENTRY SYSTEM RISER"**)
- ✱ **20 m MAX.** Local door-opener button.
- ⁜ Only cut off the resistor for the output used.

Simplebus TOP video entry phone system with 1 main entrance, 4 secondary entrances and the corresponding secondary porter switchboards

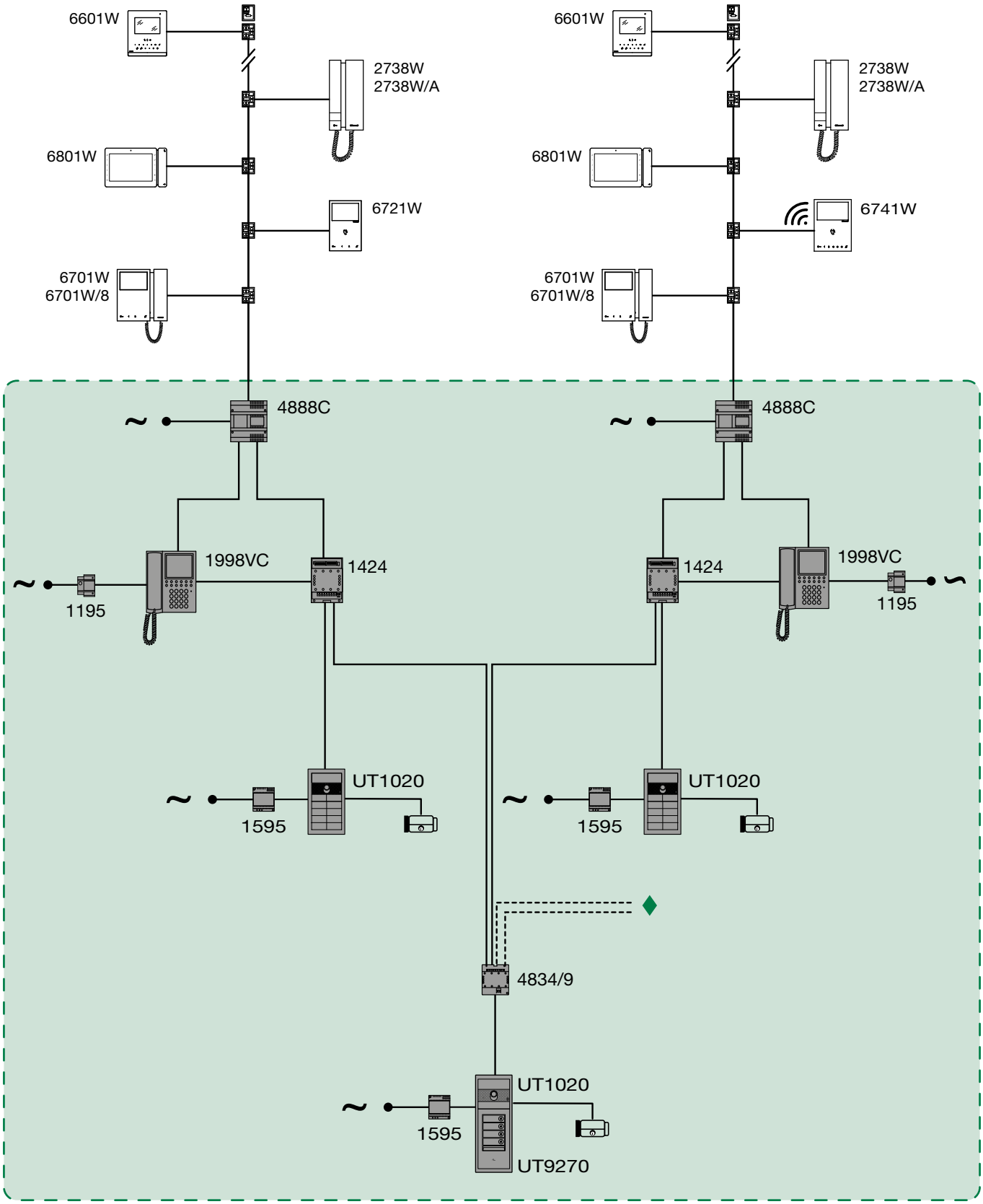

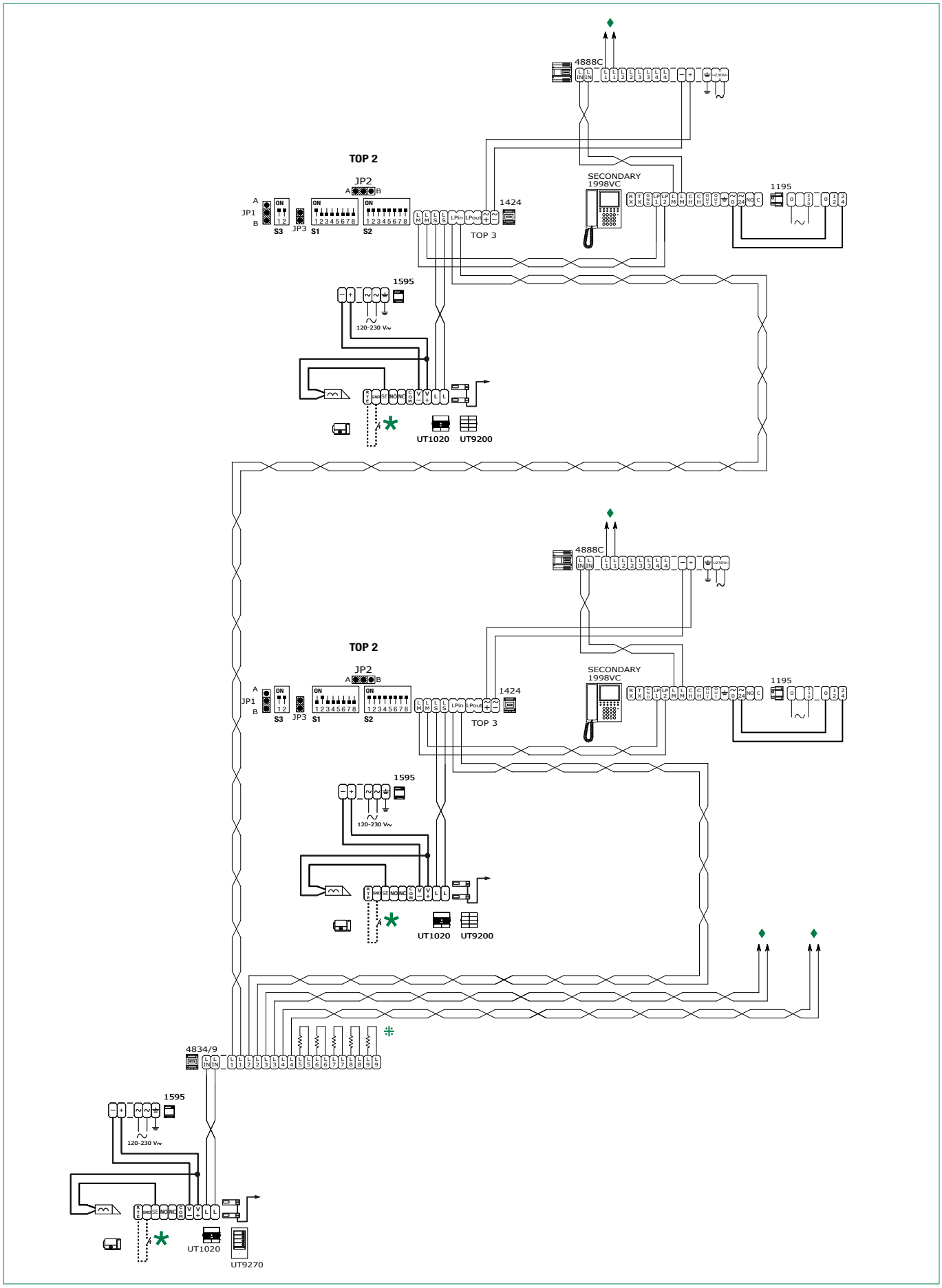

SIMPLEBUS2 AUDIO-VIDEO

- ♦ Video entry system riser (see: **"VIDEO ENTRY SYSTEM RISER"**)
- ✱ **20 m MAX.** Local door-opener button.
- ⁜ Only cut off the resistor for the output used.

Simplebus TOP video entry phone system with 2 main entrances, 4 secondary entrances and main porter switchboard

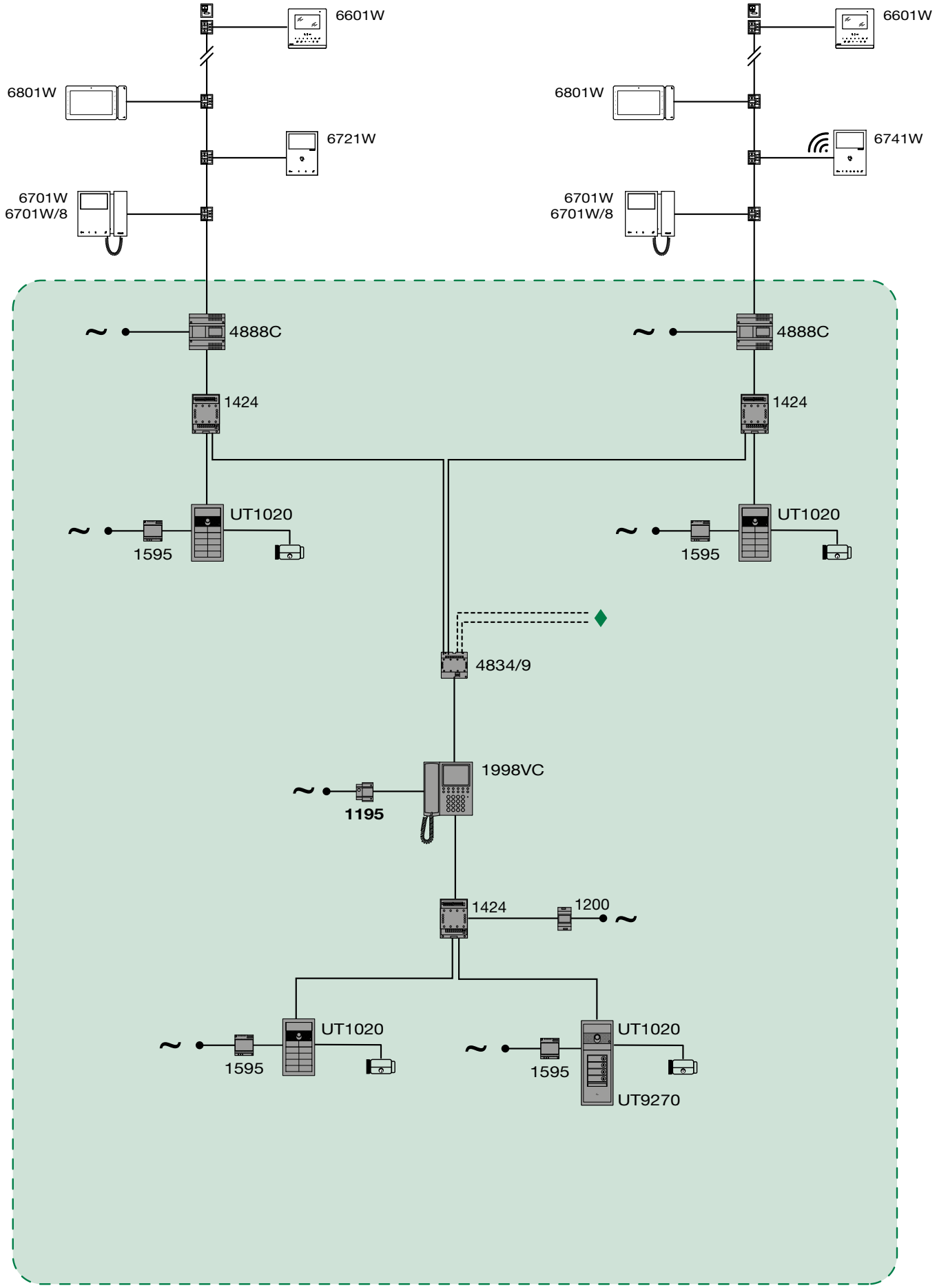

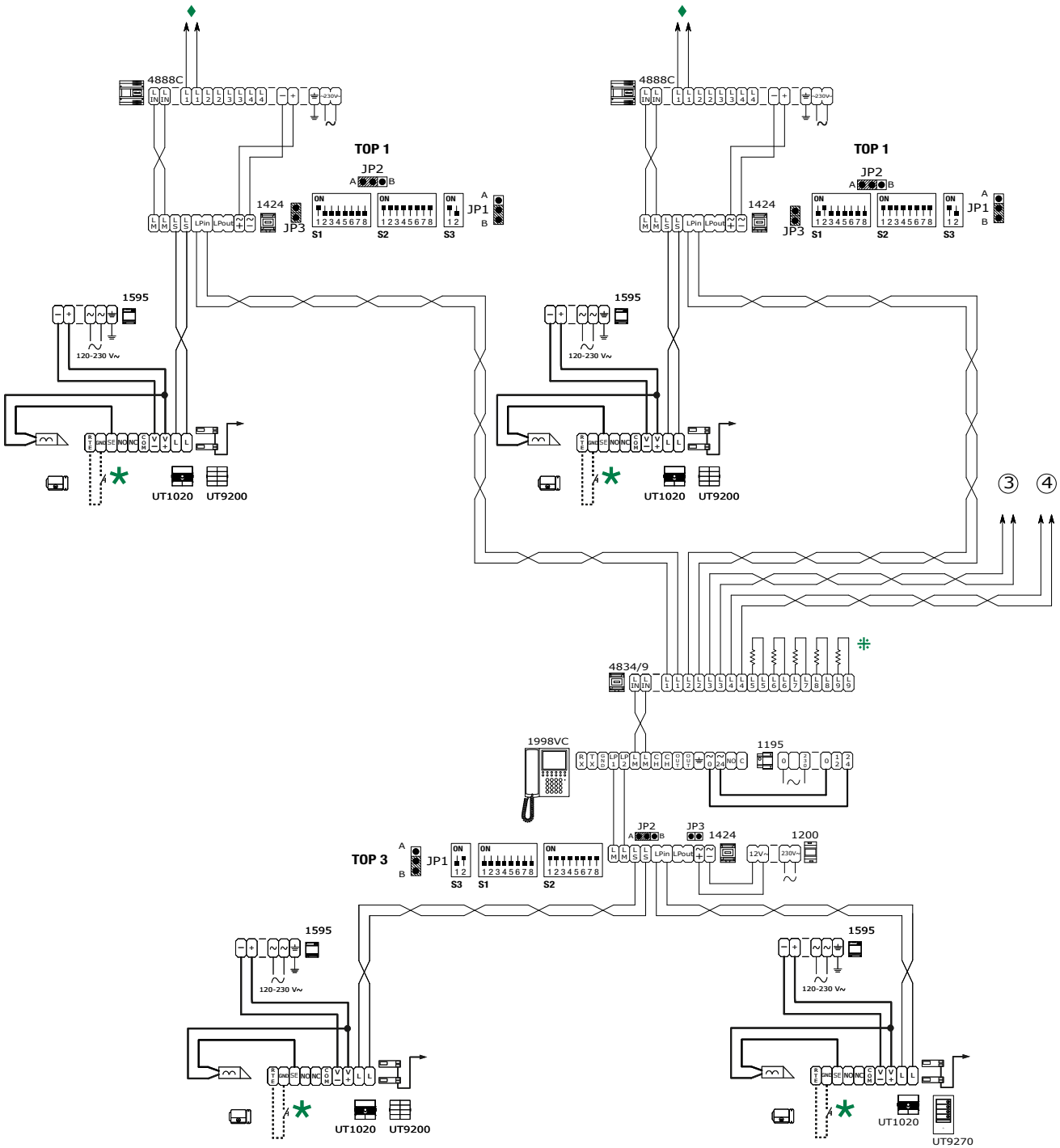

- ♦ Video entry system riser (see: **"VIDEO ENTRY SYSTEM RISER"**)
- ✱ **20 m MAX.** Local door-opener button.
- ⁜ Only cut off the resistor for the output used.

Simplebus TOP video entry phone system with 2 main entrances, 1 main porter switchboard, 2 secondary entrances and corresponding porter switchboards

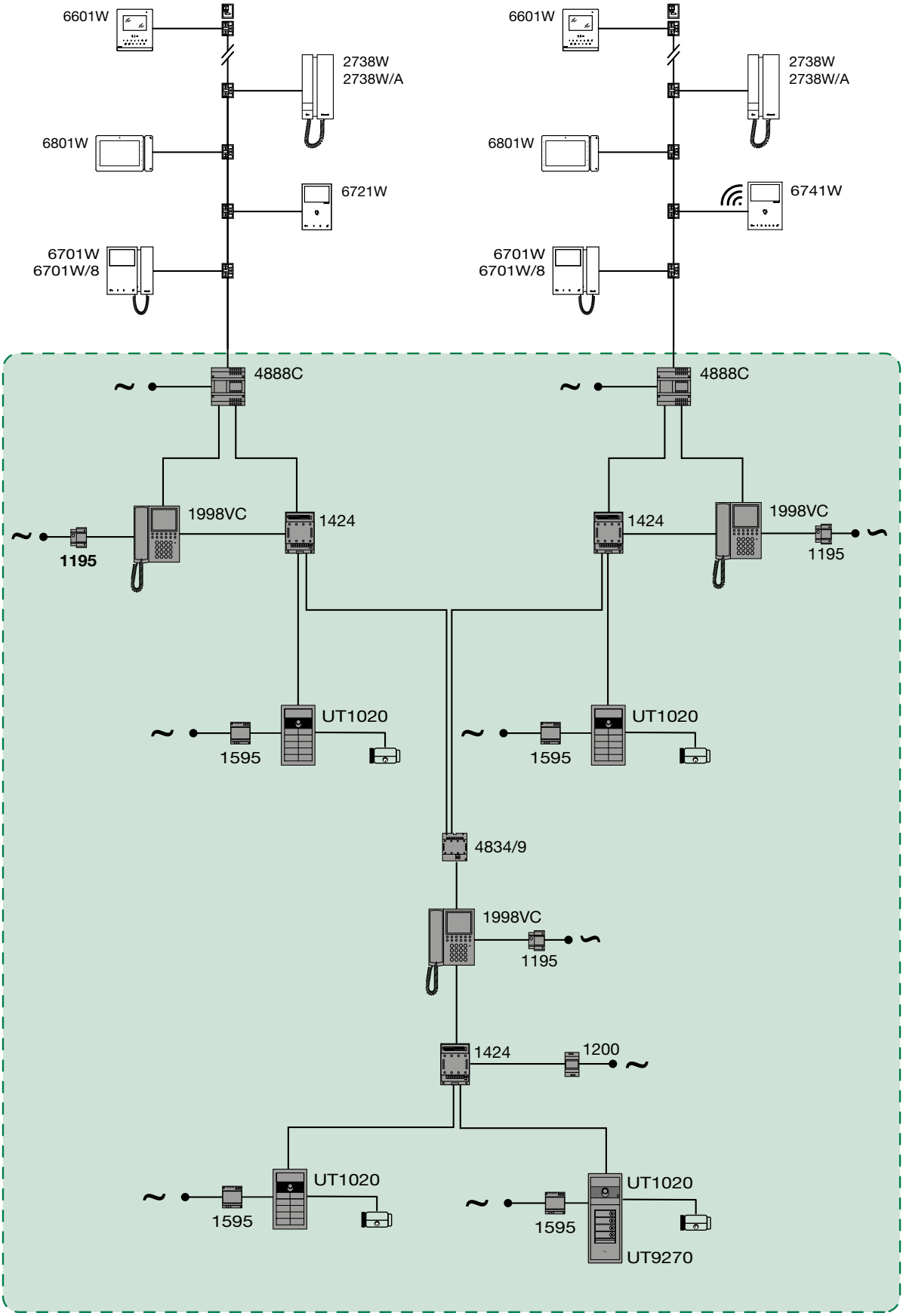

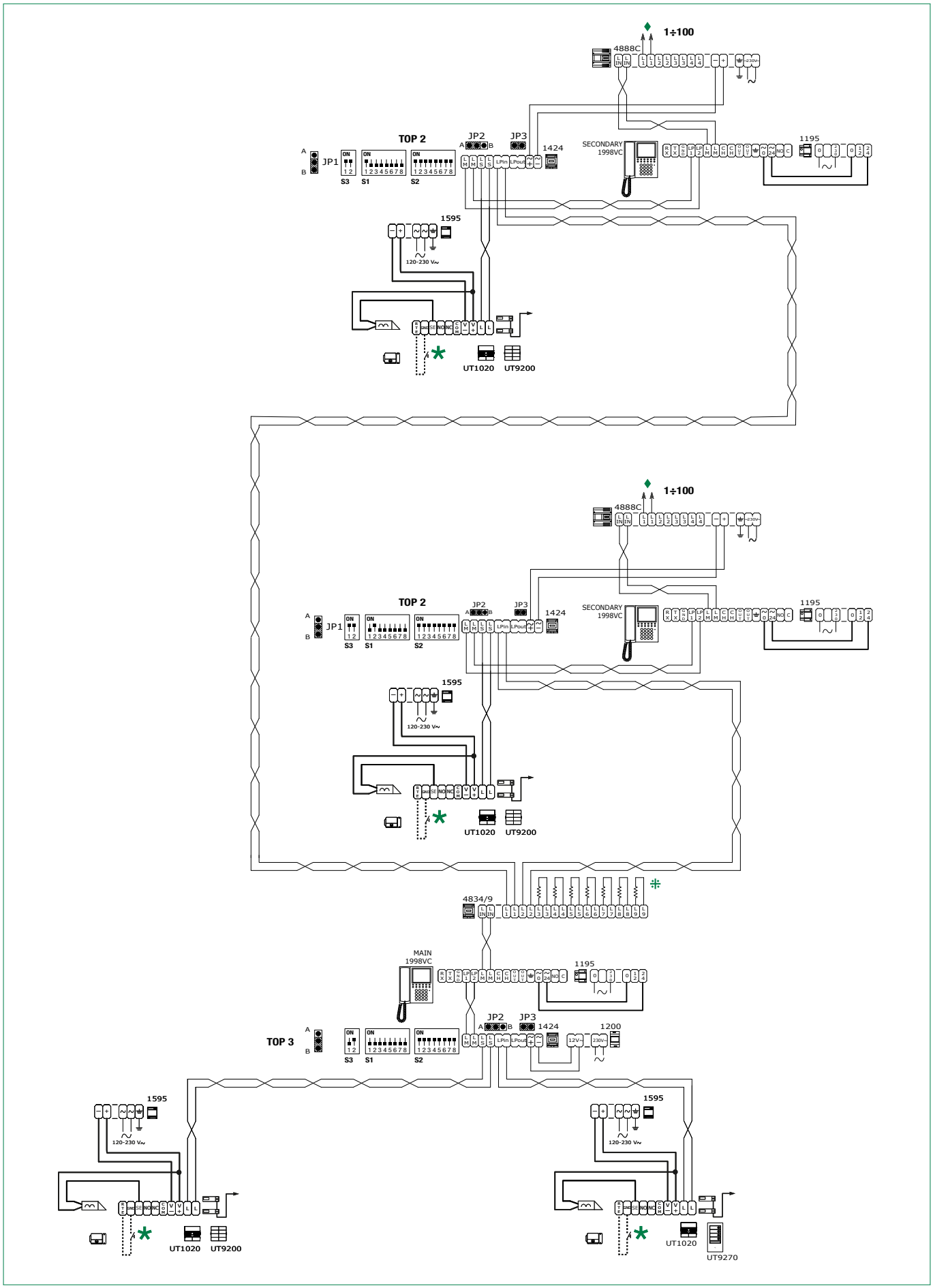

♦ Video entry system riser (see: **"VIDEO ENTRY SYSTEM RISER"**)

✶ **20 m MAX.** Local door-opener button.

⁜ Only cut off the resistor for the output used.

Simplebus TOP video entry phone system with 1 main entrance, 4 secondary entrances and 2 main porter switchboards in SERIES

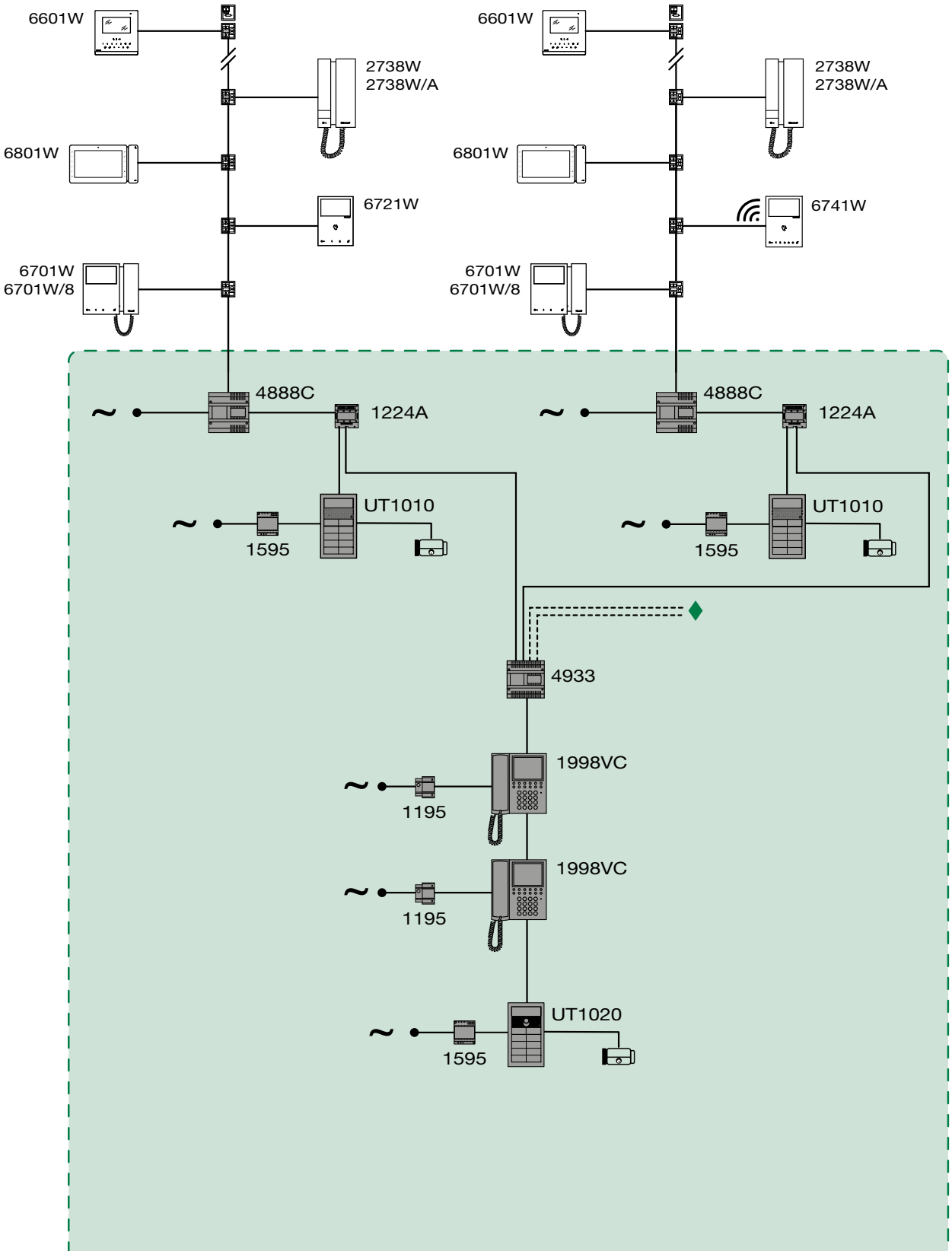

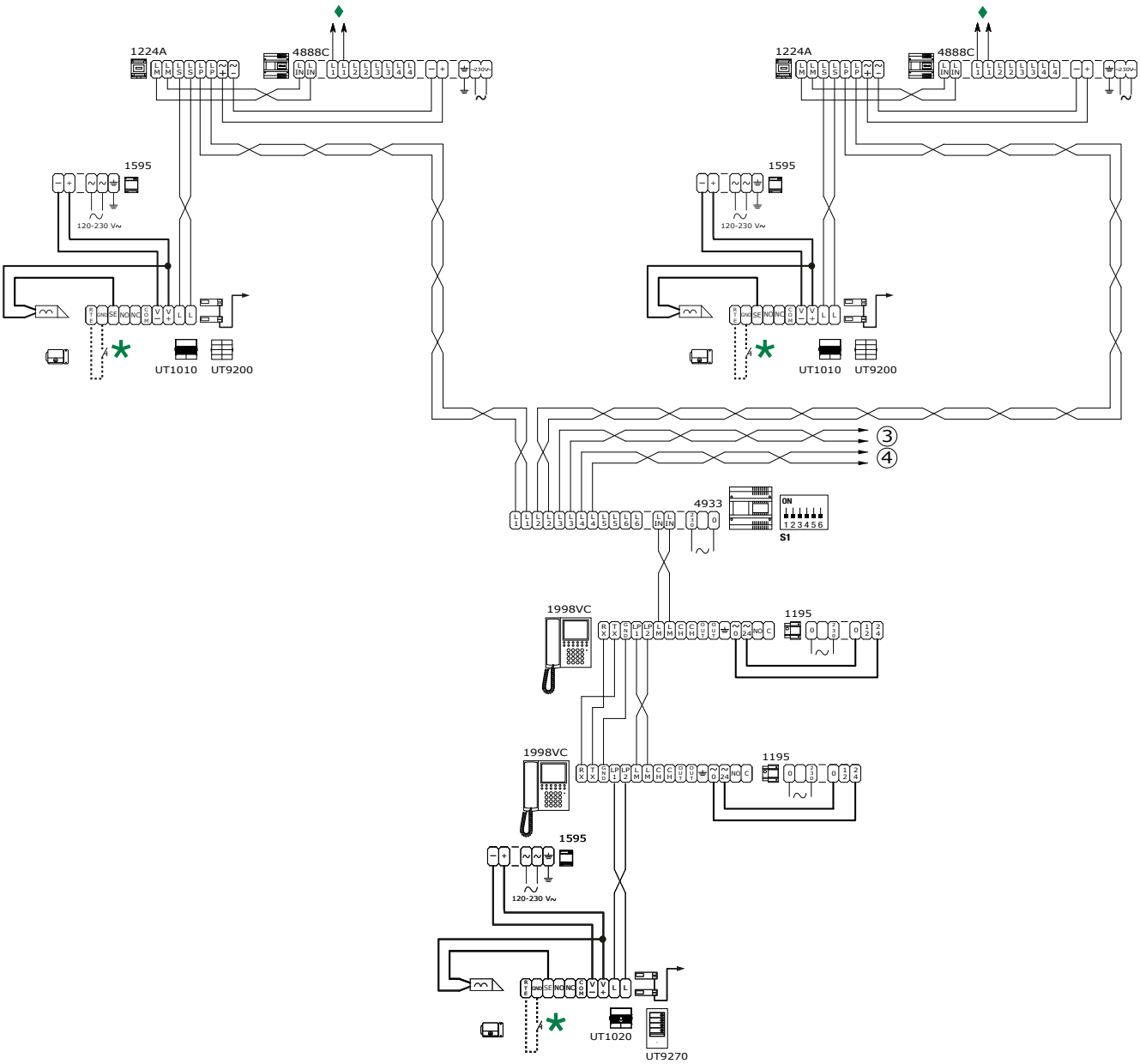

- ♦ Video entry system riser (see: **"VIDEO ENTRY SYSTEM RISER"**)
- ✱ **20 m MAX.** Local door-opener button.
- ⁜ Only cut off the resistor for the output used.

Simplebus TOP video entry phone system with 1 main entrance, 3 secondary entrances and 2 main porter switchboards in PARALLEL

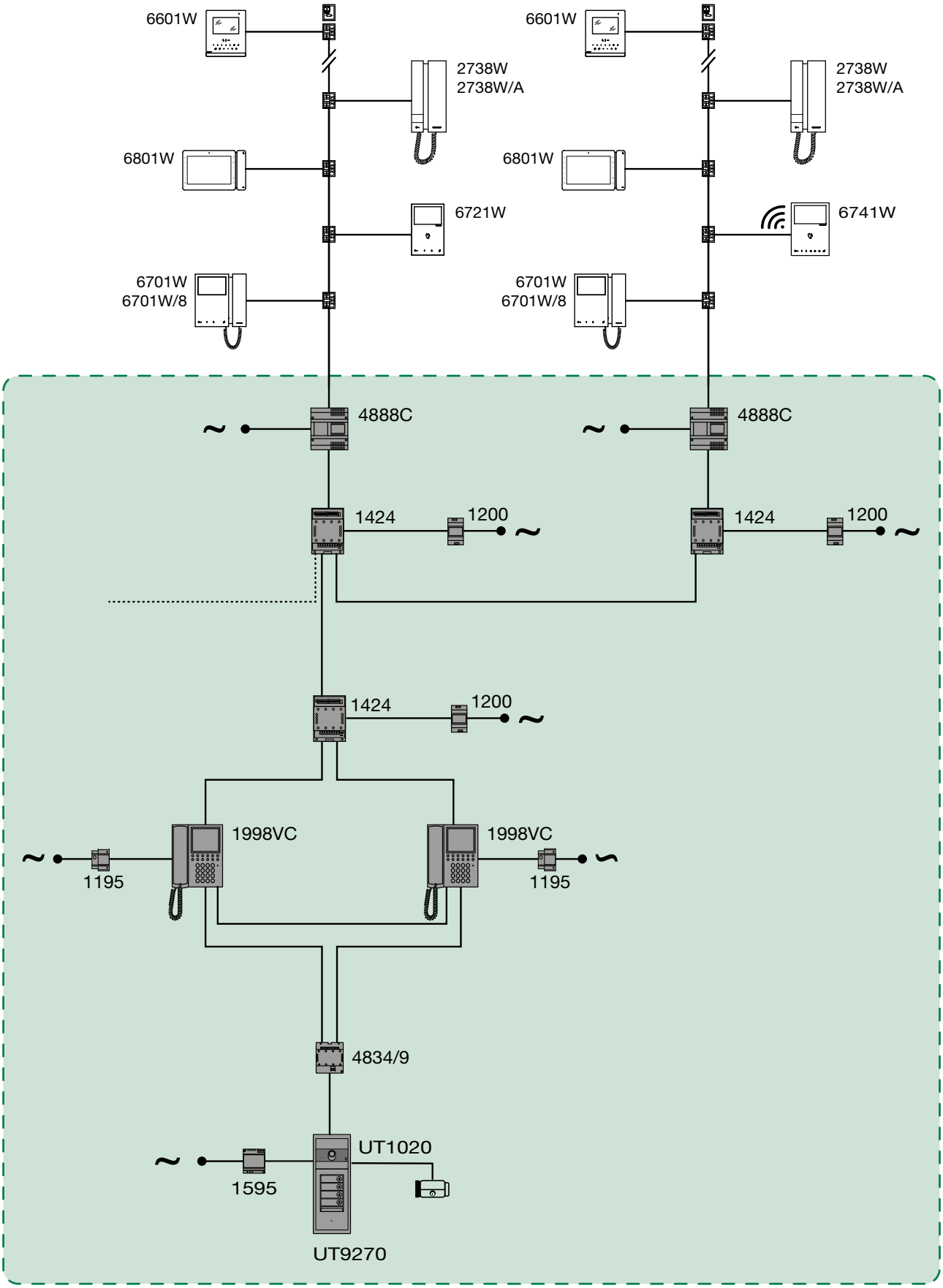

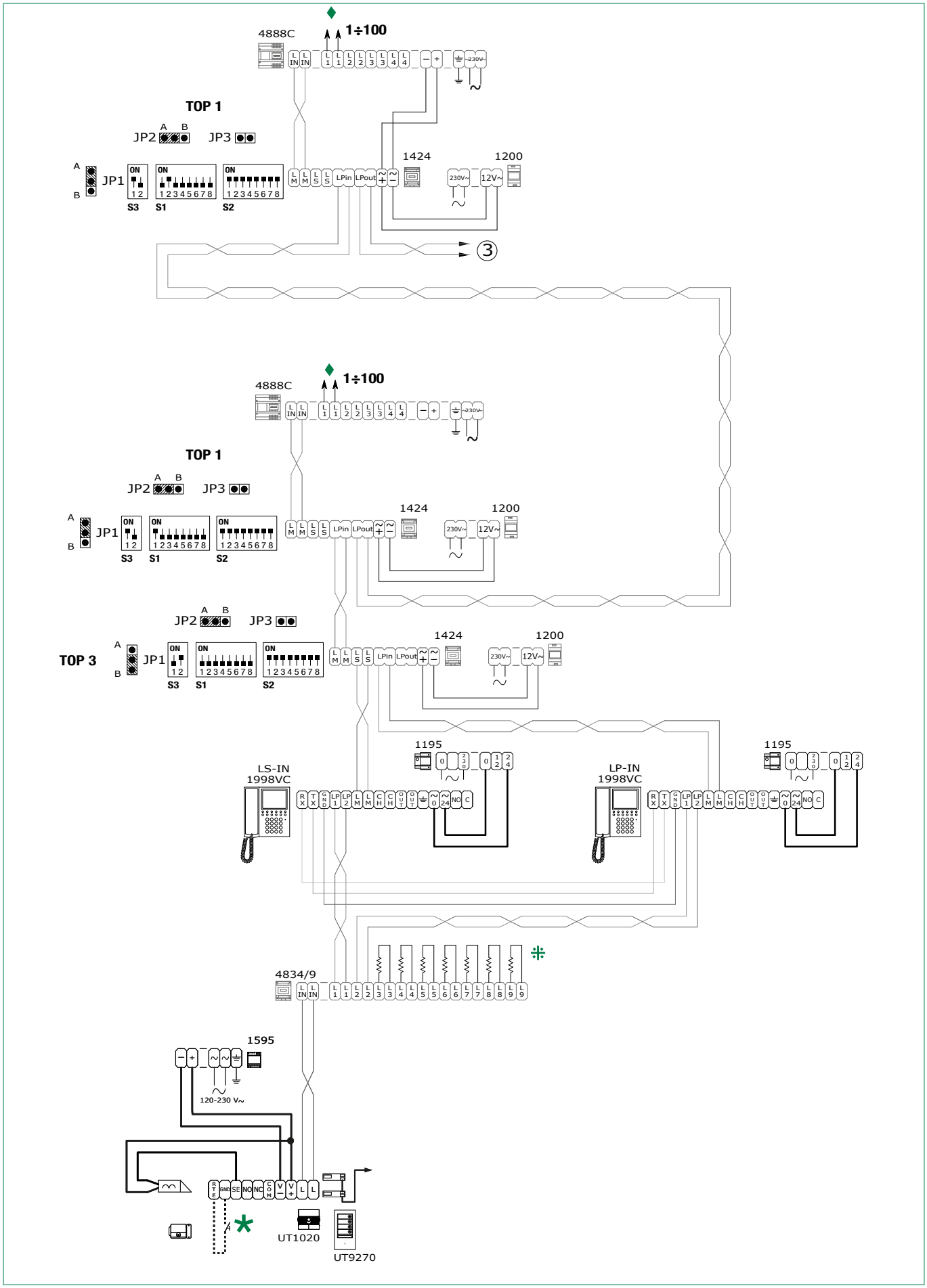

♦ Video entry system riser (see: **"VIDEO ENTRY SYSTEM RISER"**)

✱ **20 m MAX.** Local door-opener button.

⁜ Only cut off the resistor for the output used.

Switching devices in TOP1 mode, branched KIT 8461/8451, external unit in TOP mode

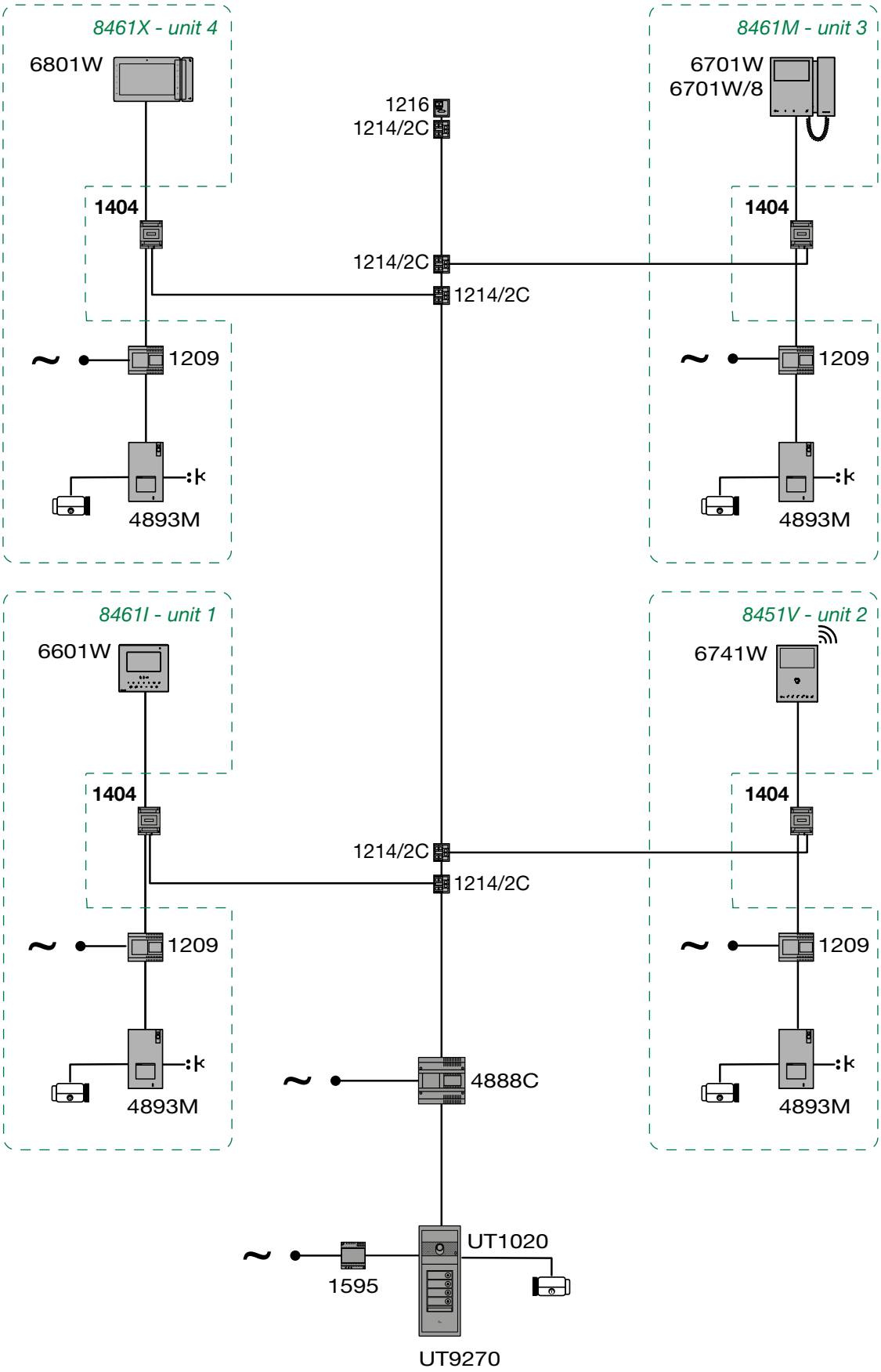

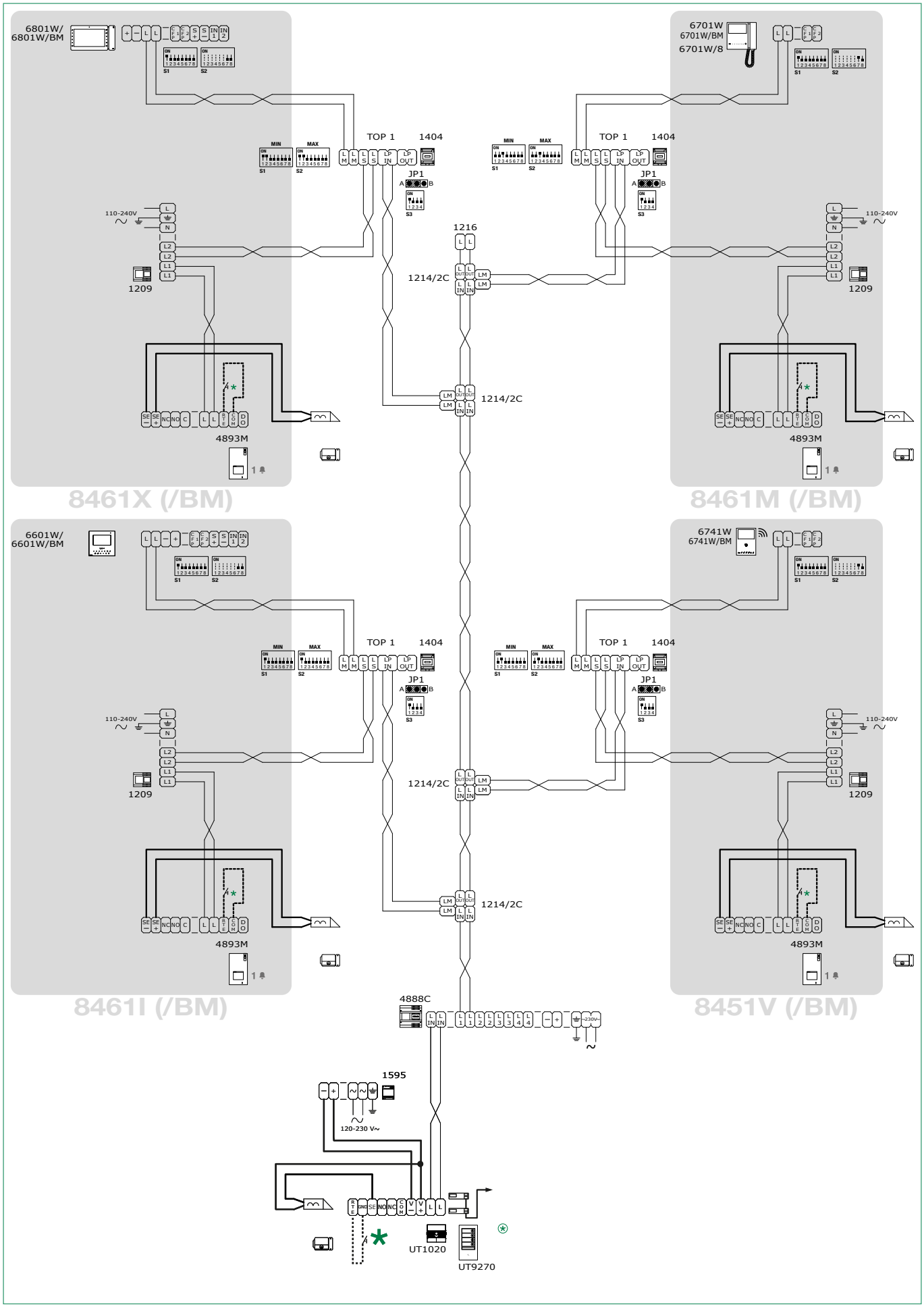

✱ **20 m MAX.** Local door-opener button.

⊛ Main port in TOP mode.

Switching devices in STANDARD mode, branched KIT 8461/8451

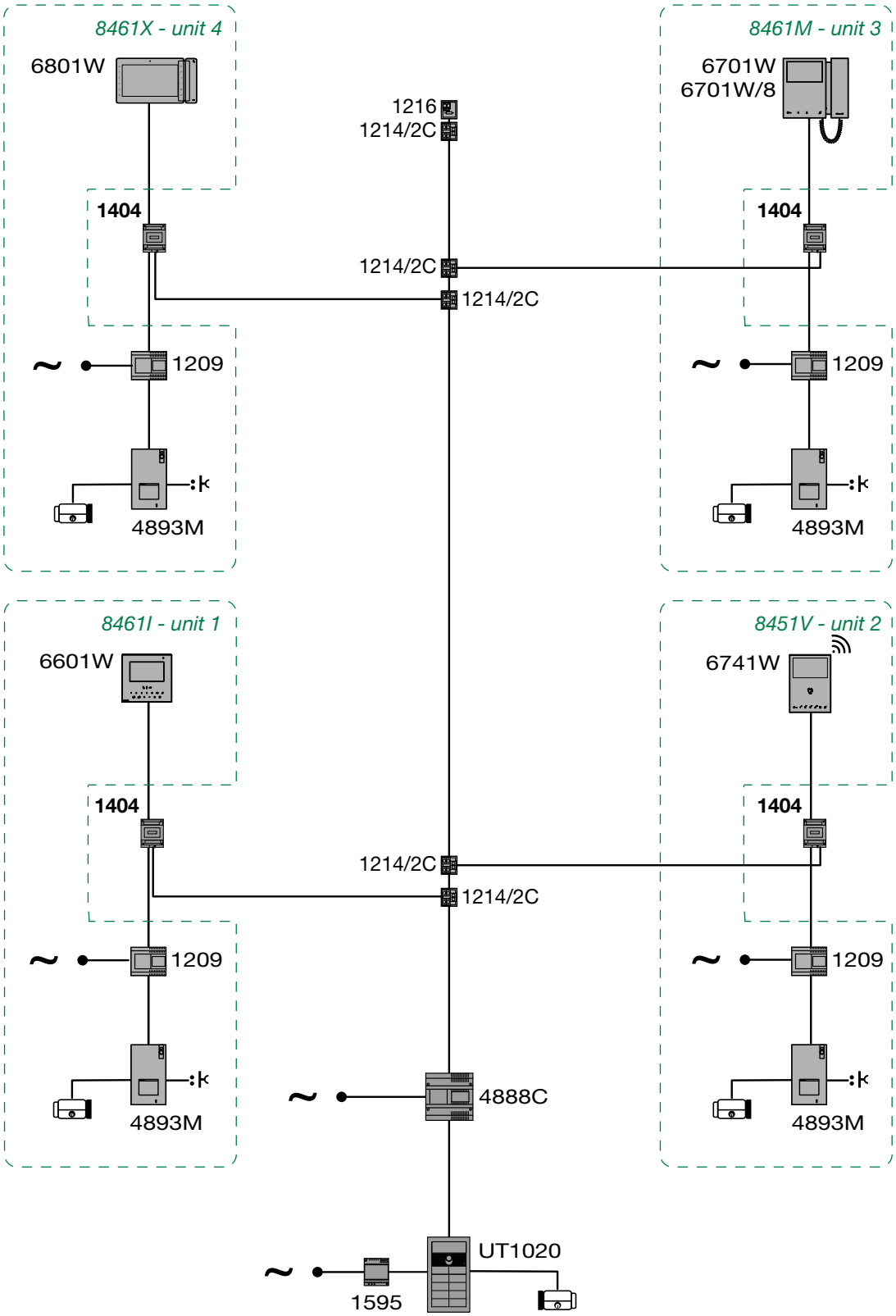

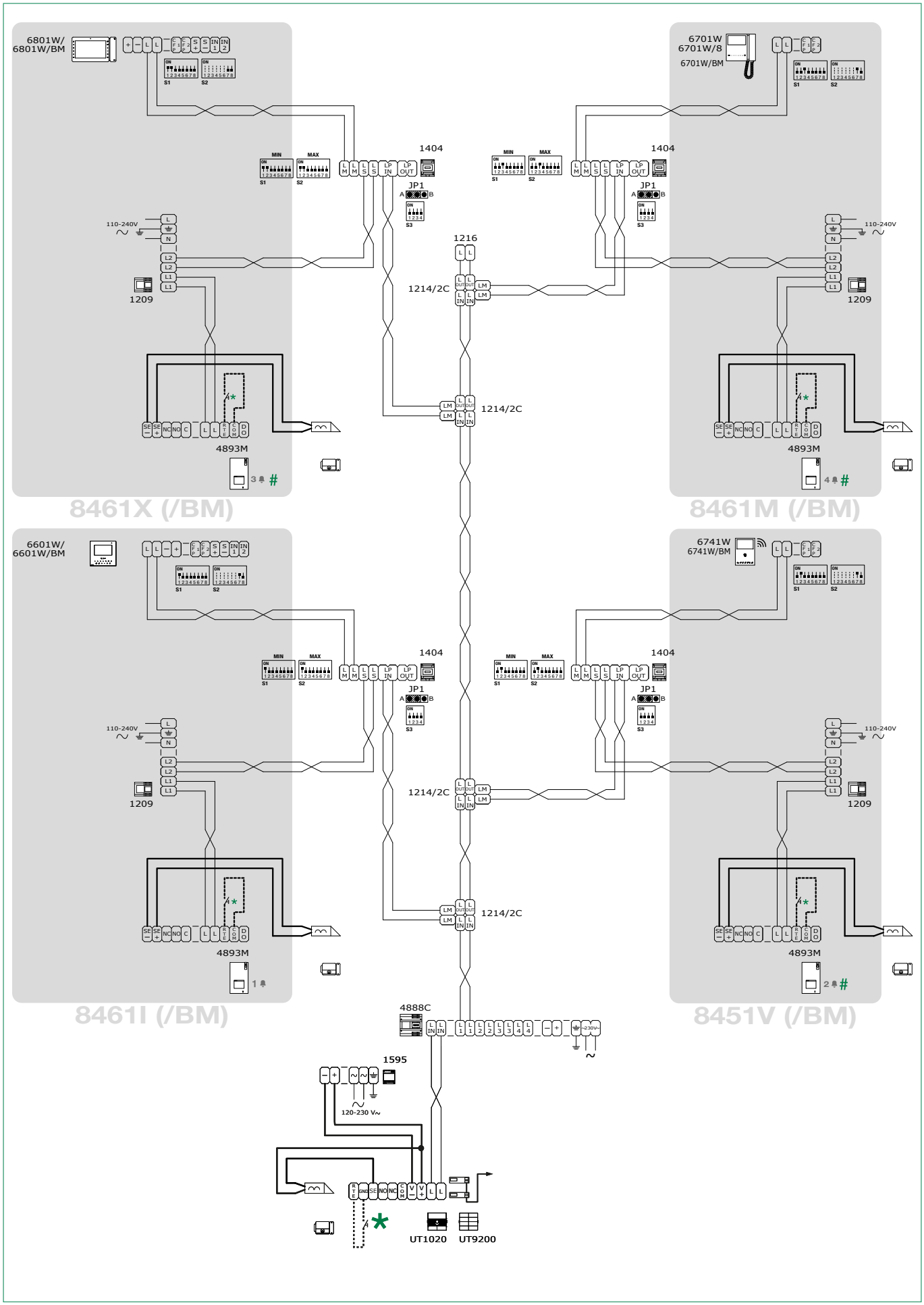

✱ **20 m MAX.** Local door-opener button.

For call address programming, please refer to the full manual for Art. 4893M.

Switching devices in STANDARD mode and KIT 8461/8451 in cascade connection

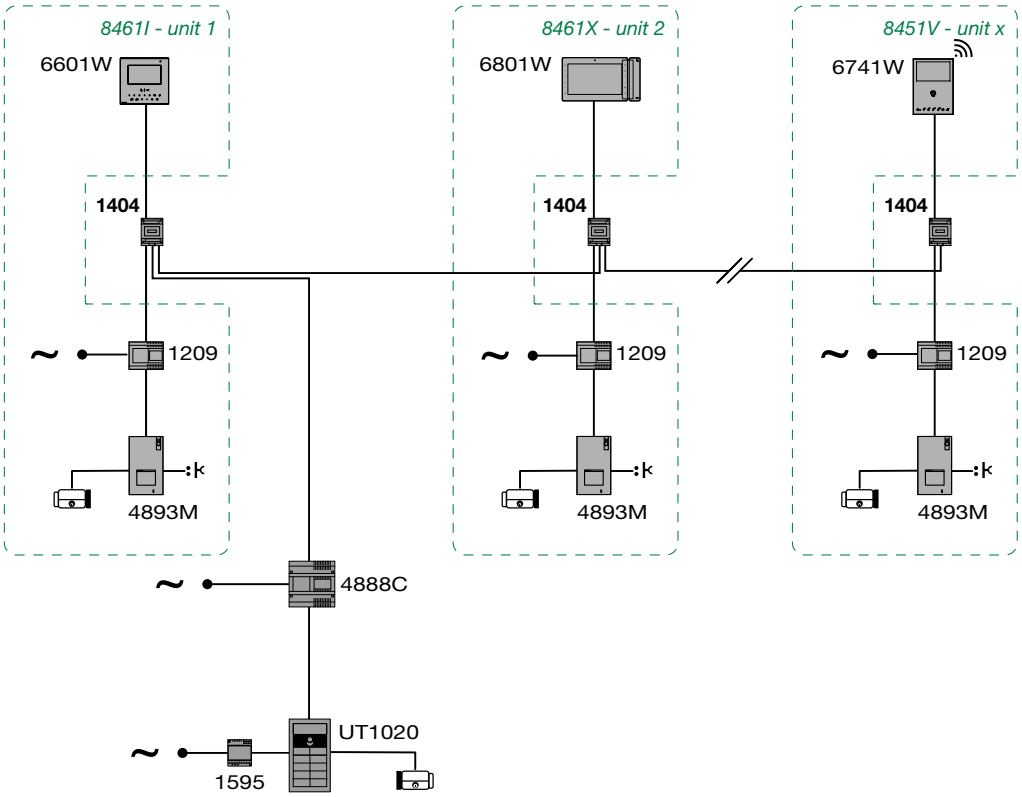

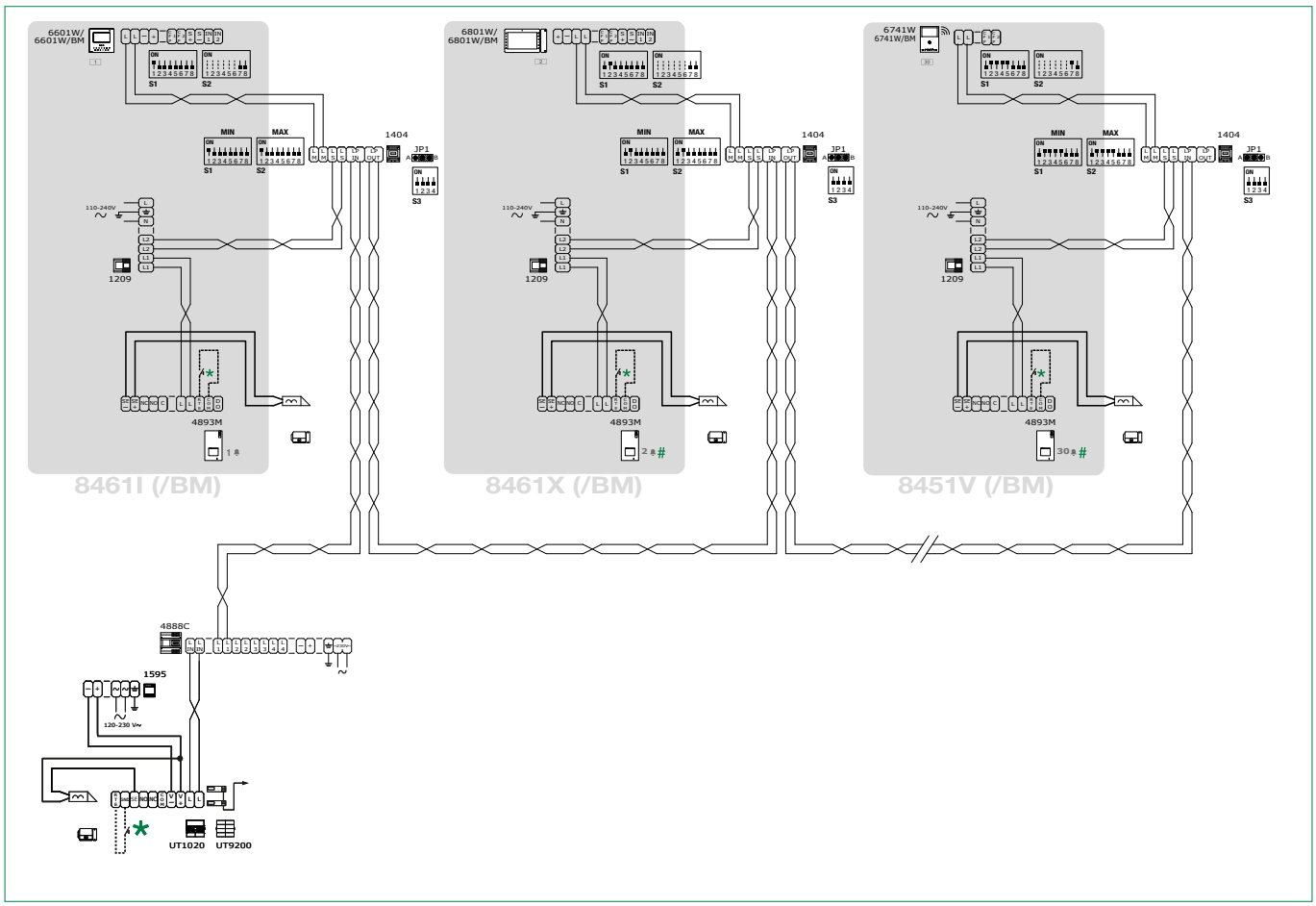

* **20 m MAX.** Local door-opener button.

\# For call address programming, please refer to the full manual for Art. 4893M

Switching devices in TOP1 mode and KIT 8461/8451 in cascade connection, with external unit in TOP mode

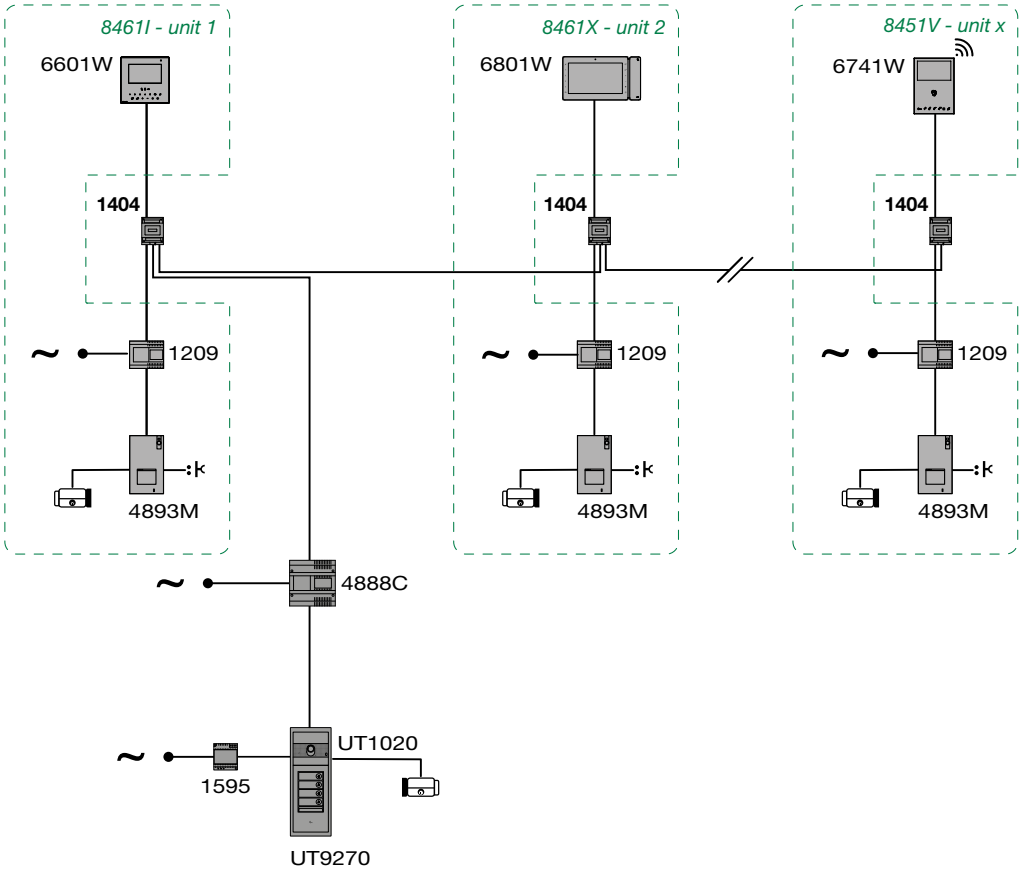

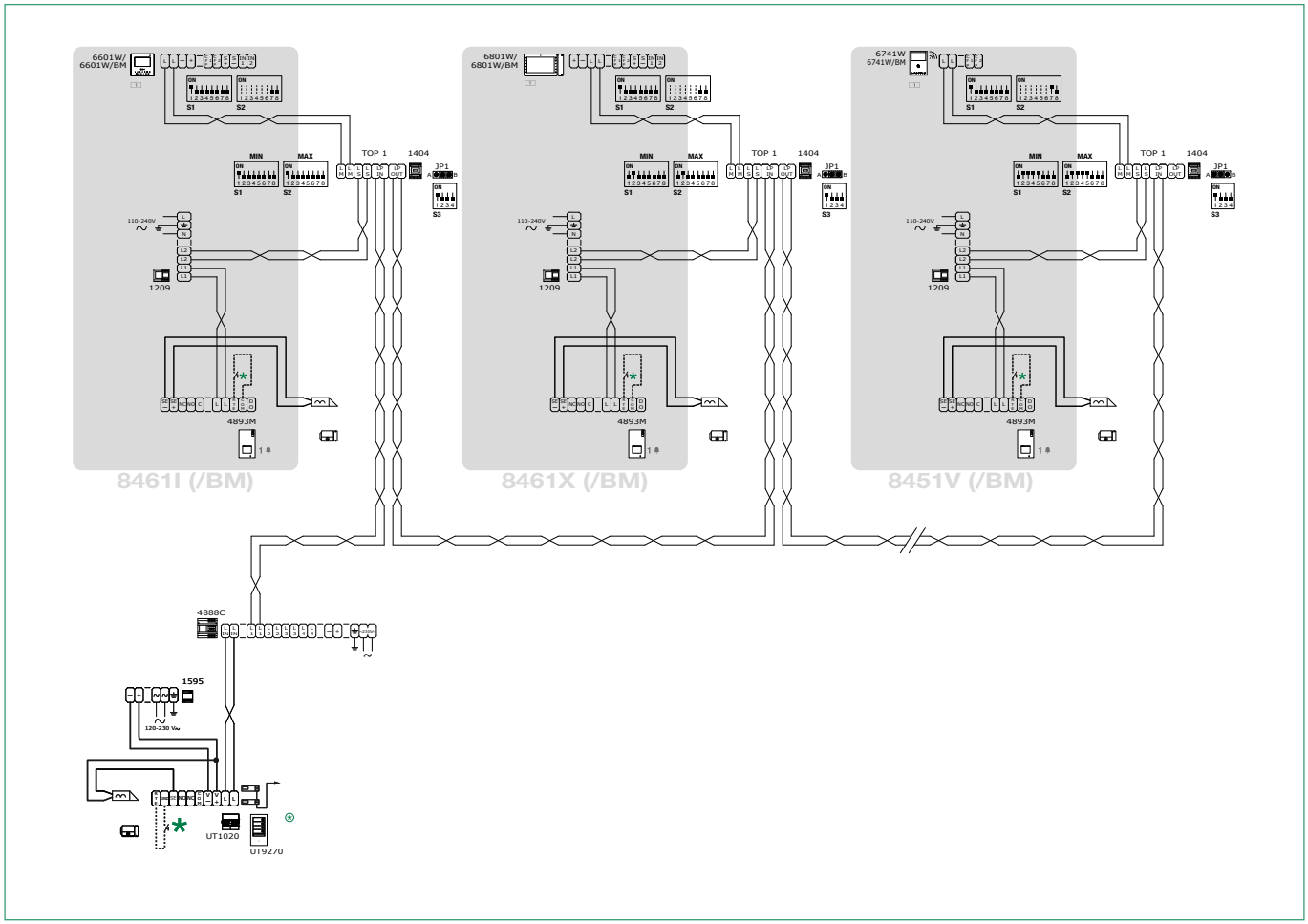

✱ **20 m MAX.** Local door-opener button.

⊛ Main port in TOP mode.

Addition of remote camera module Art. 1409

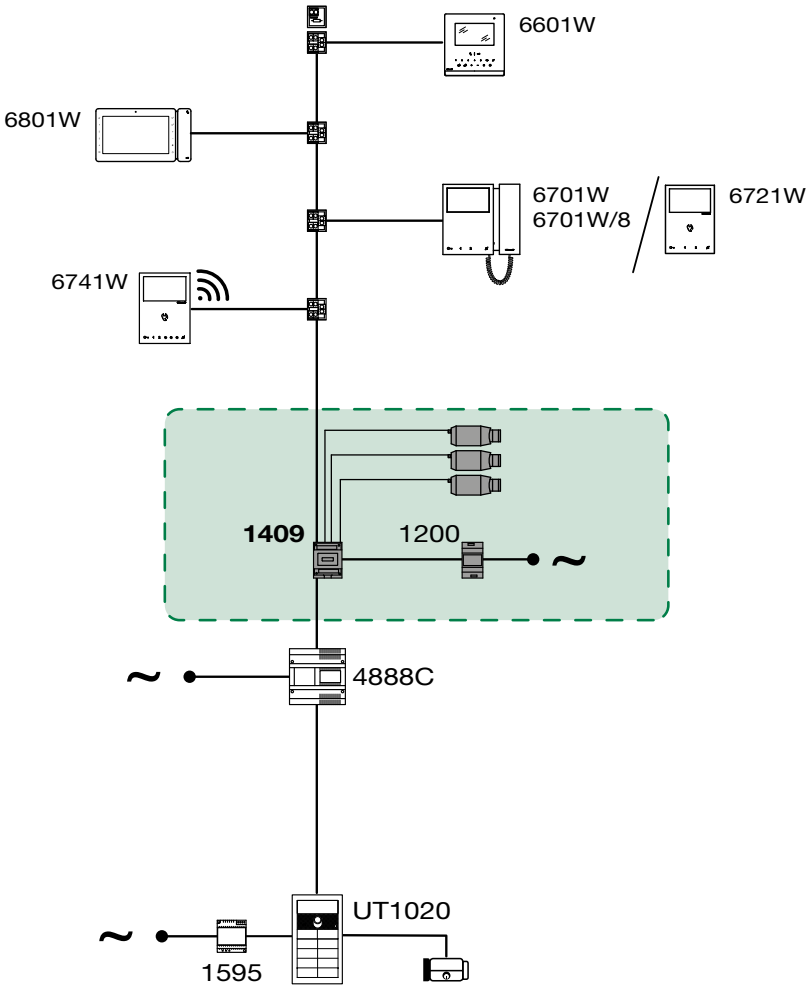

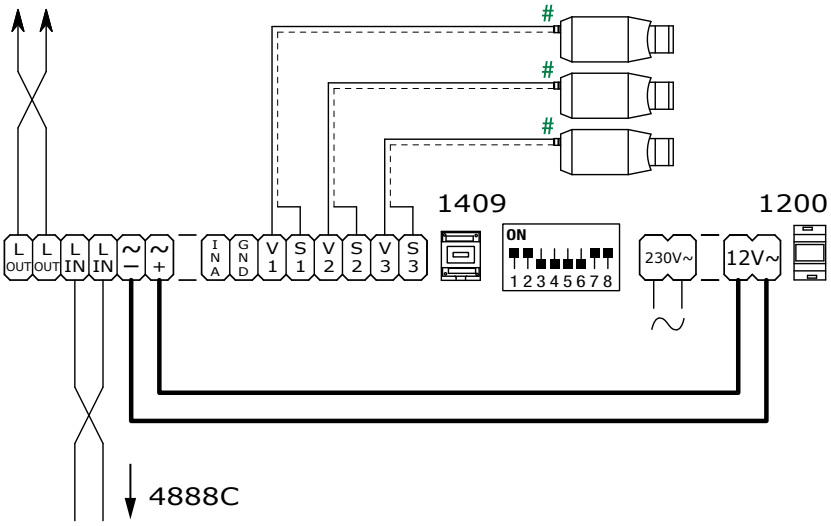

To be powered separately.

Addition of remote camera module Art. 1259C

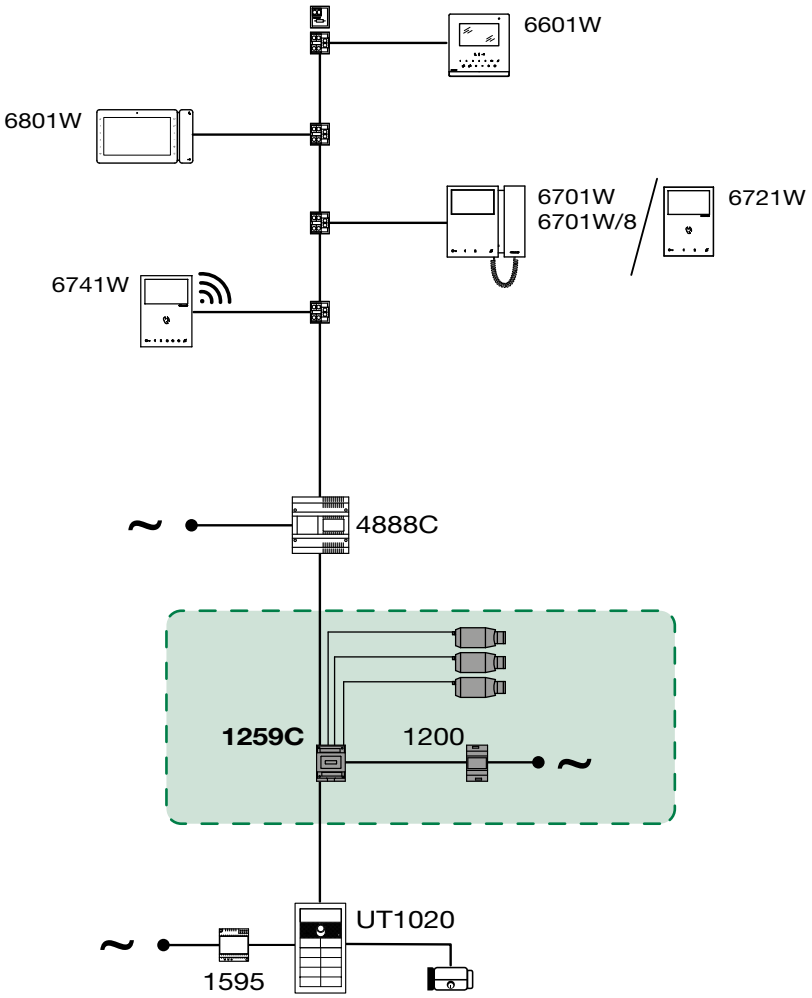

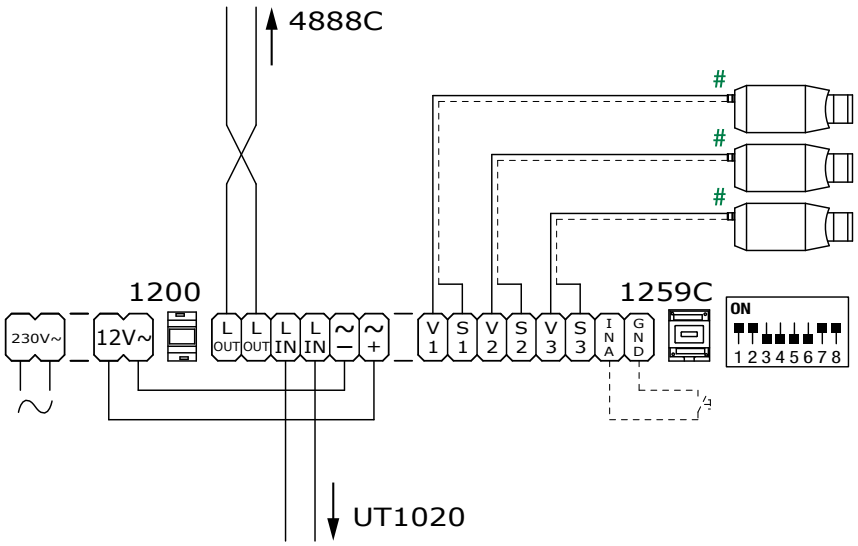

To be powered separately.

System with remote camera module Art. 1259C in generic actuator mode and porter switchboard

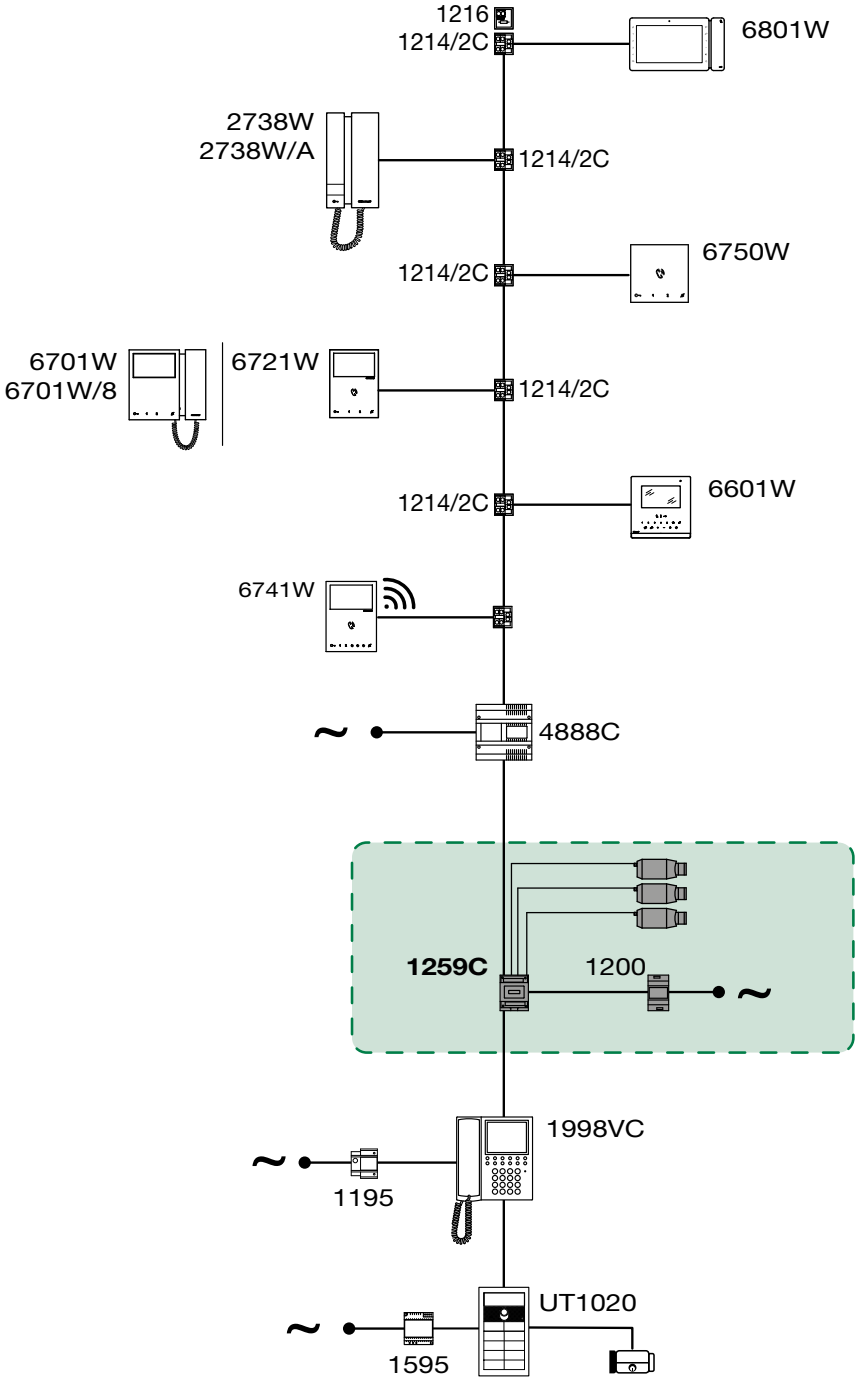

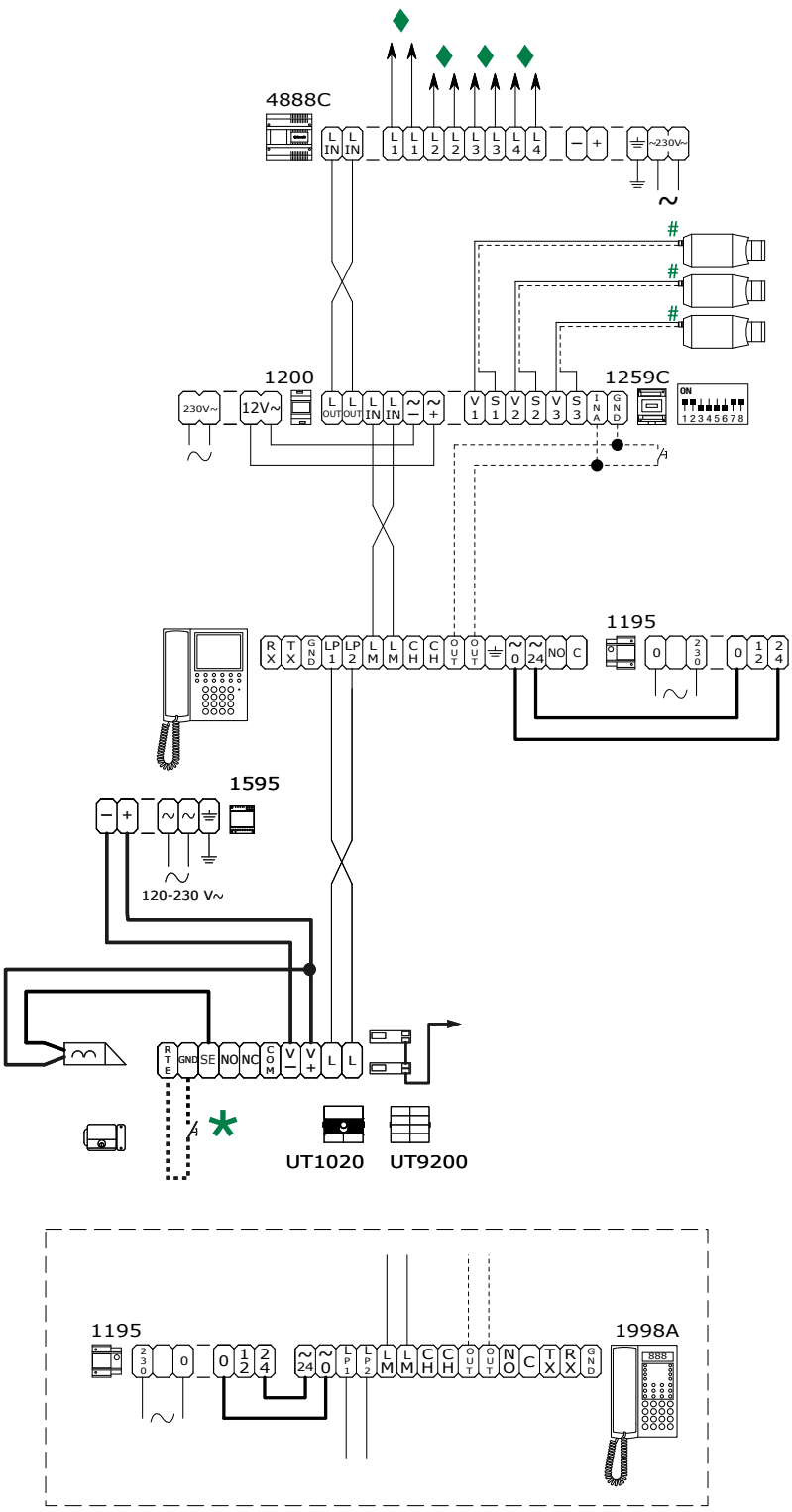

♦ Video entry system riser (see: **"VIDEO ENTRY SYSTEM RISER"**)

✶ **20 m MAX.** Local door-opener button.

\# To be powered separately.

2nd edition 10/2020
code 2G41000020

CERTIFIED MANAGEMENT SYSTEMS

ISO 9001 ISO 14001

www.comelitgroup.com
Via Don Arrigoni, 5 - 24020 Rovetta (BG) - Italy

Comelit®
Passion.Technology.Design.